SEQUENTIAL NETWORKS

- CANONICAL FORM OF SEQUENTIAL NETWORKS
- LATCHES AND EDGE-TRIGGERED CELLS. D FLIP-FLOP
- TIMING CHARACTERISTICS
- ANALYSIS AND DESIGN OF CANONICAL NETWORKS
- SR, JK and T FLIP-FLOP
- ANALYSIS OF FLIP-FLOP NETWORKS
- DESIGN OF FLIP-FLOP NETWORKS. EXCITATION FUNCTIONS
- SPECIAL STATE ASSIGNMENTS: ONE-FLIP-FLOP-PER-STATE AND SHIFTING REGISTER

CANONICAL FORM OF SEQUENTIAL NETWORKS (Huffman-Moore)

State-transition function $s(t+1) = G(s(t), x(t))$

Output function $z(t) = H(s(t), x(t))$

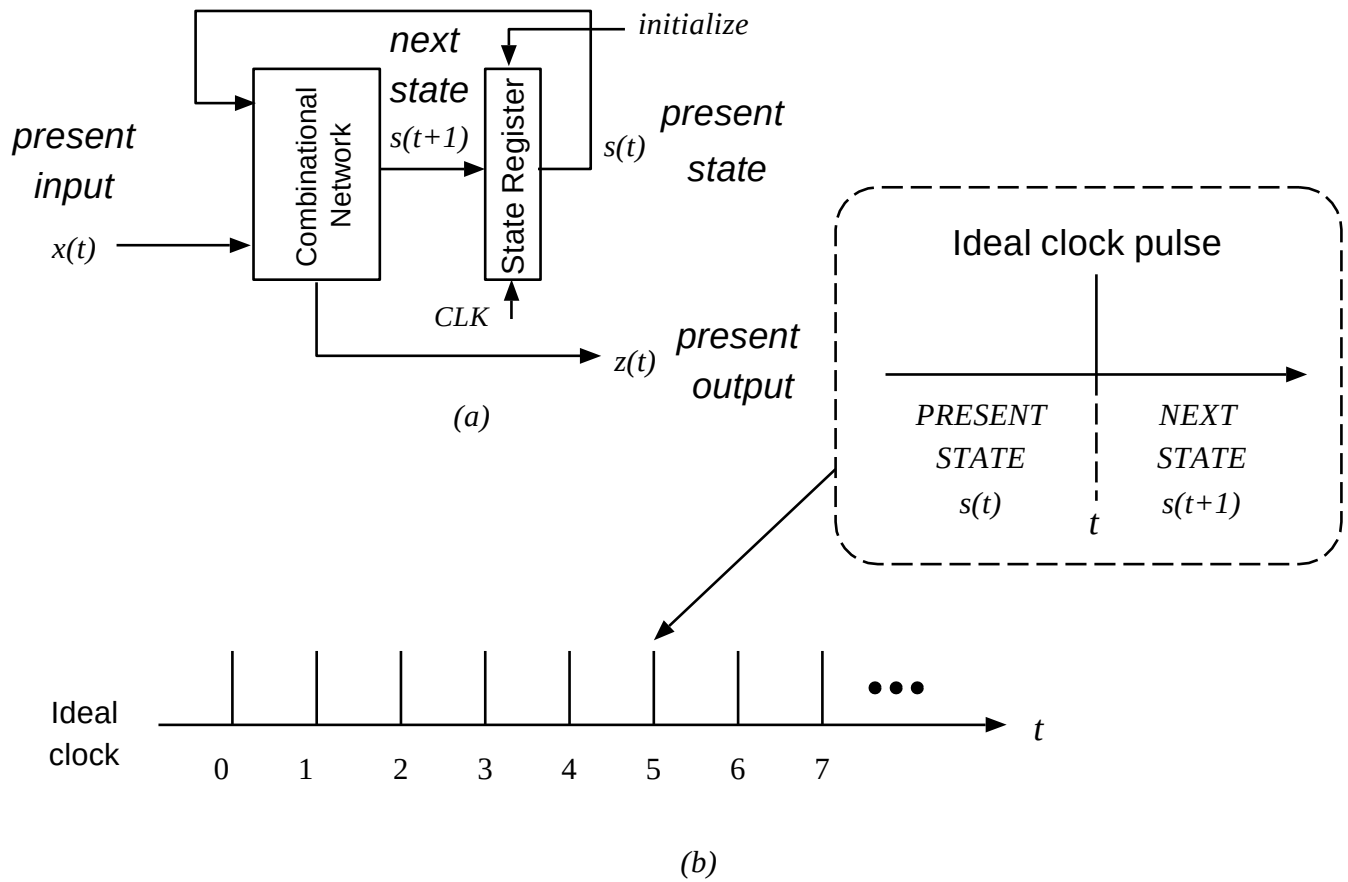

Figure 8.1: a) CANONICAL IMPLEMENTATION OF SEQUENTIAL NETWORK. b) IDEAL CLOCK SIGNAL AND ITS INTERPRETATION.

MEALY AND MOORE MACHINES

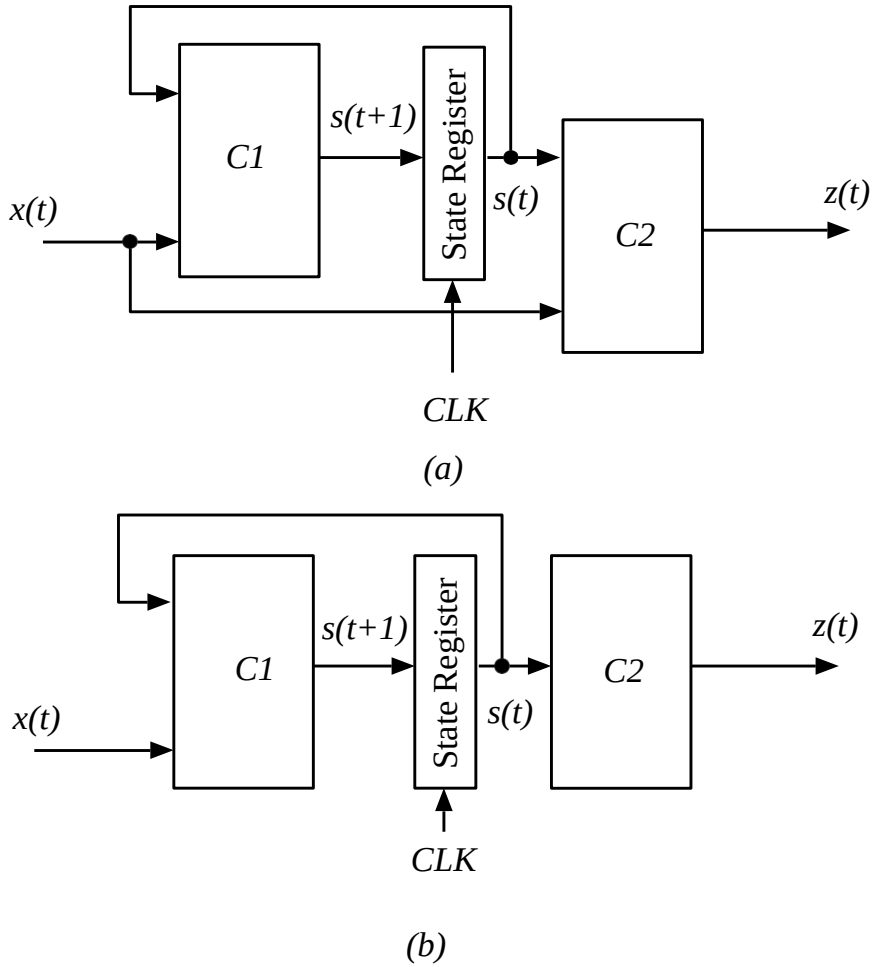

Figure 8.2: CANONICAL IMPLEMENTATIONS: a) MEALY MACHINE. b) MOORE MACHINE.

HIGH-LEVEL AND BINARY IMPLEMENTATIONS

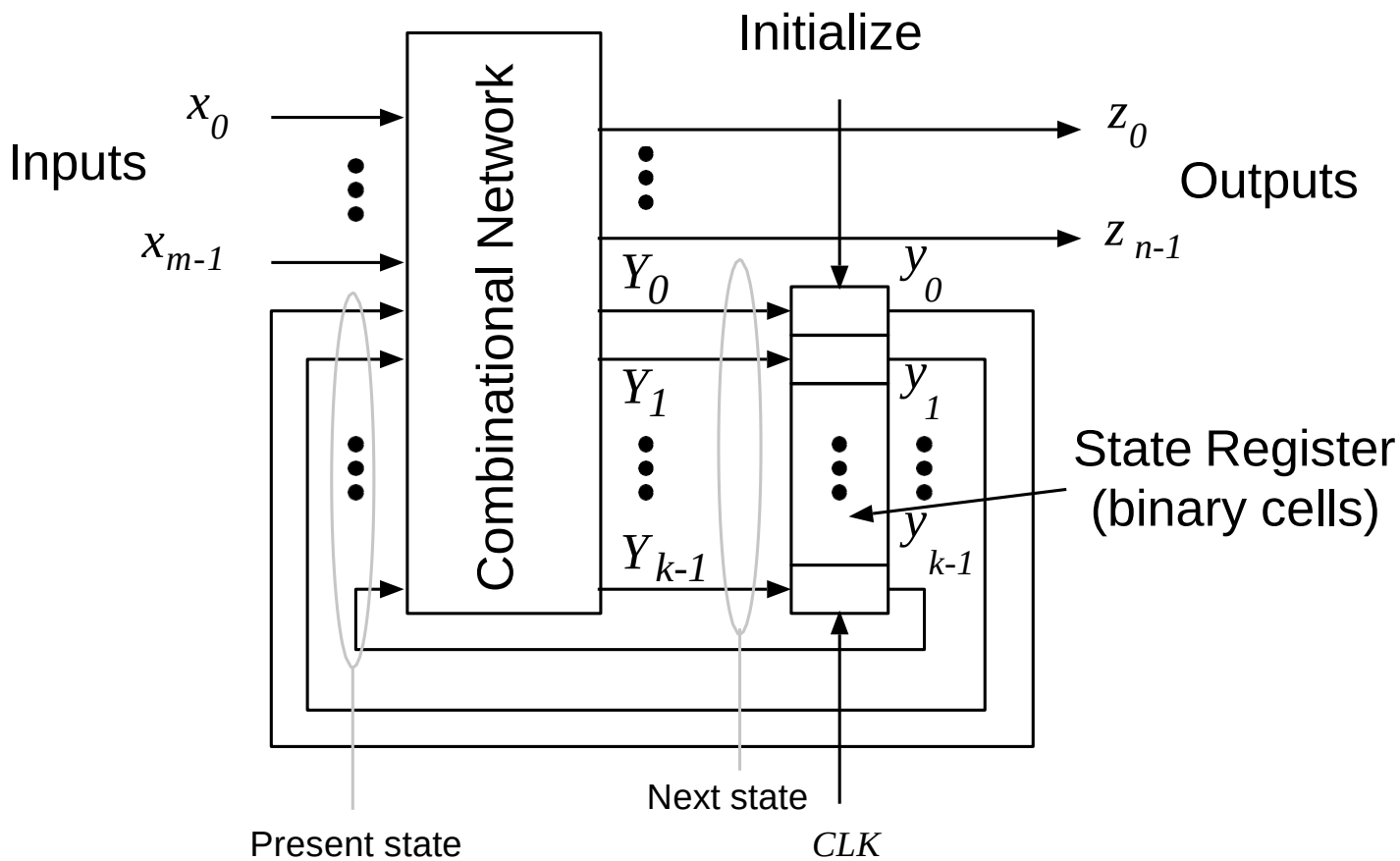

Figure 8.3: CANONICAL IMPLEMENTATION WITH BINARY VARIABLES.

EXAMPLE 8.1

Input:	$\underline{x}(t) = (x_1, x_0), \quad x_i \in \{0, 1\}$
Output:	$z(t) \in \{0, 1\}$
State:	$\underline{y}(t) = (y_3, y_2, y_1, y_0), \quad y_i(t) \in \{0, 1\}$
Initial state:	$\underline{y}(0) = (0, 0, 0, 0)$

Function: The transition and output functions

$$
\begin{aligned}
Y_3 &= y_2 x_1' x_0 \\
Y_2 &= (y_1 + y_2) x_0' + y_3 x_1 \\
Y_1 &= (y_0 + y_3) x_1' x_0 + (y_0 + y_1) x_1 \\
Y_0 &= (y_0 + y_3) x_0' y_1 x_1' x_0 + y_2 x_1 \\
z &= y_3 + y_2 + y_1 + y_0
\end{aligned}
$$

EXAMPLE 8.1 (cont.)

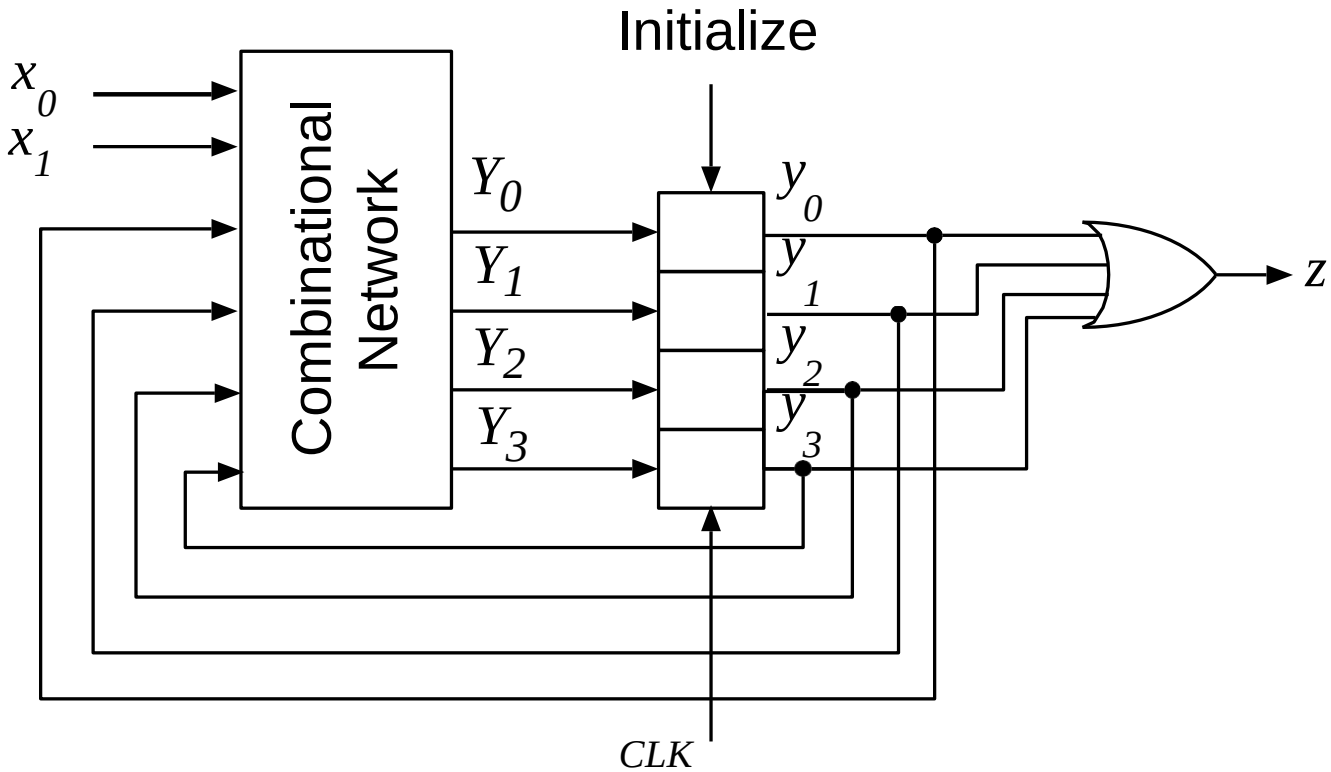

Figure 8.4: CANONICAL NETWORK FOR EXAMPLE 8.1.

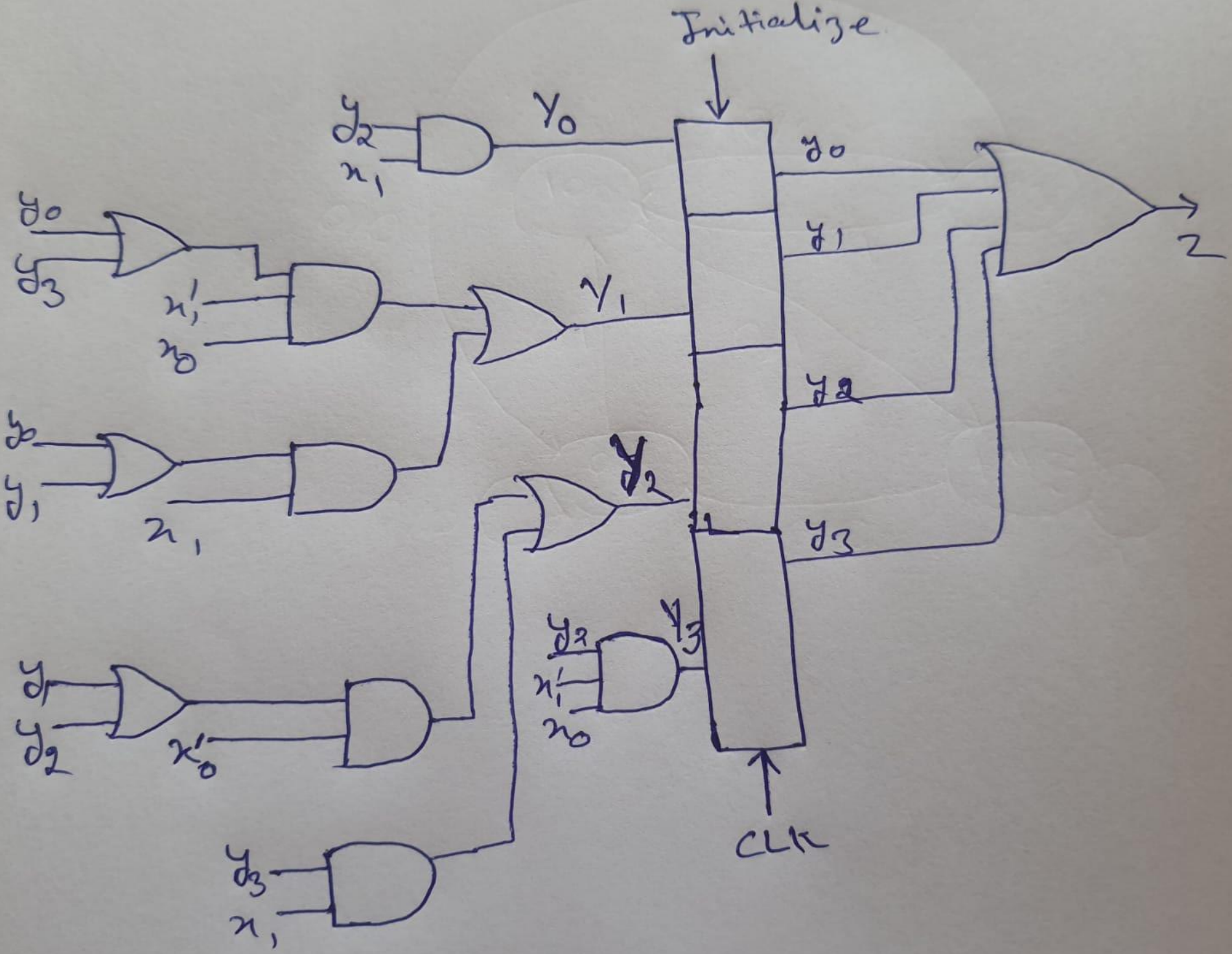
Initialize
y_2
x_1
Y_0
y_0
y_3
x_1'
x_0
Y_1
y_0
y_1
x_1
Y_2
y_1
y_2
x_0'
y_2
x_1'
x_0
Y_3
y_3
x_1
y_0
y_1
y_2
y_3
CLK
Z

CLOCK

- *clock period T*
- *clock frequency f* = 1/*T*
- *(clock) pulse width* t_w

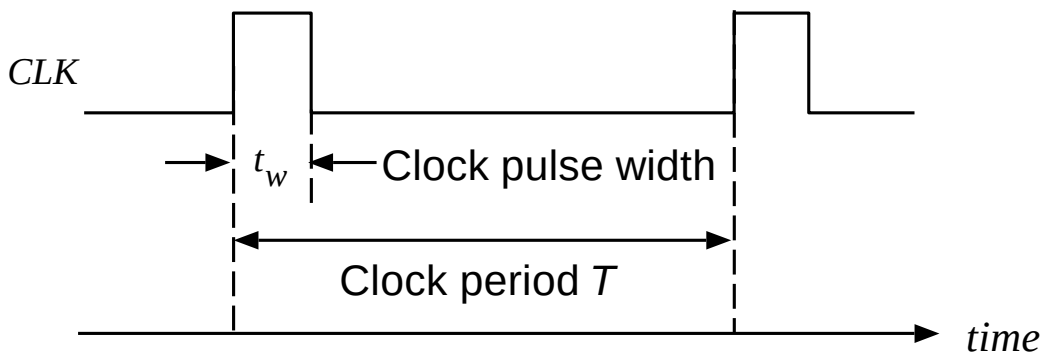

Figure 8.5: PULSE WIDTH AND CLOCK PERIOD.

GATED LATCH - FIRST TRY

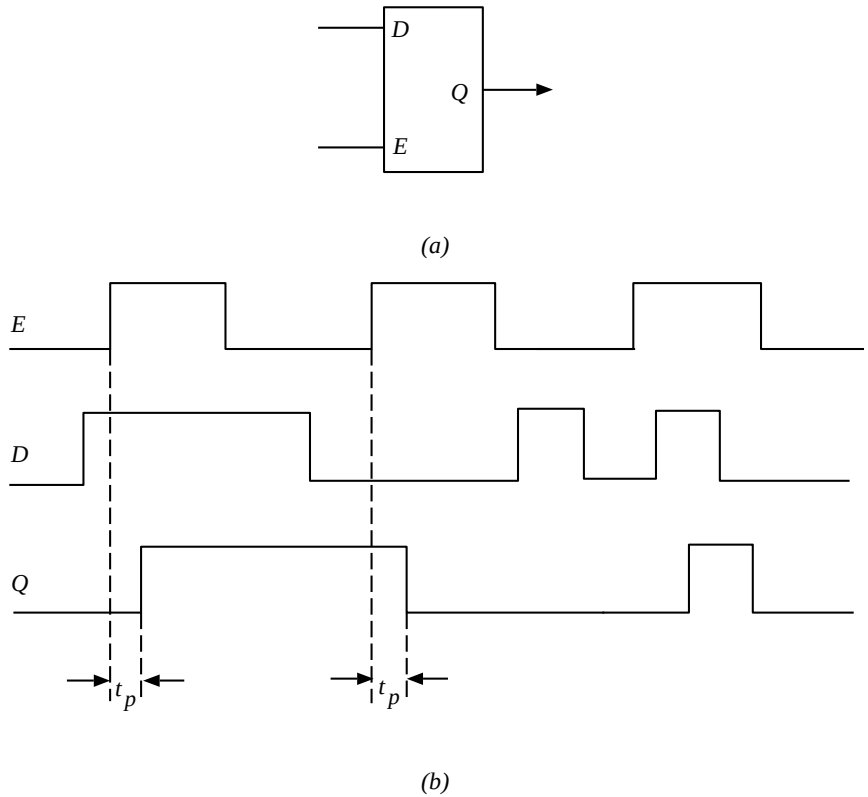

Figure 8.6: a) GATED-LATCH. b) TIMING BEHAVIOR.

$$Q(t + t_p) = D(t) \cdot E(t) + Q(t) \cdot E'(t)$$

- LEVEL-SENSITIVE: when $E = 1$ then $Q = D$

NOR-NOR LATCH

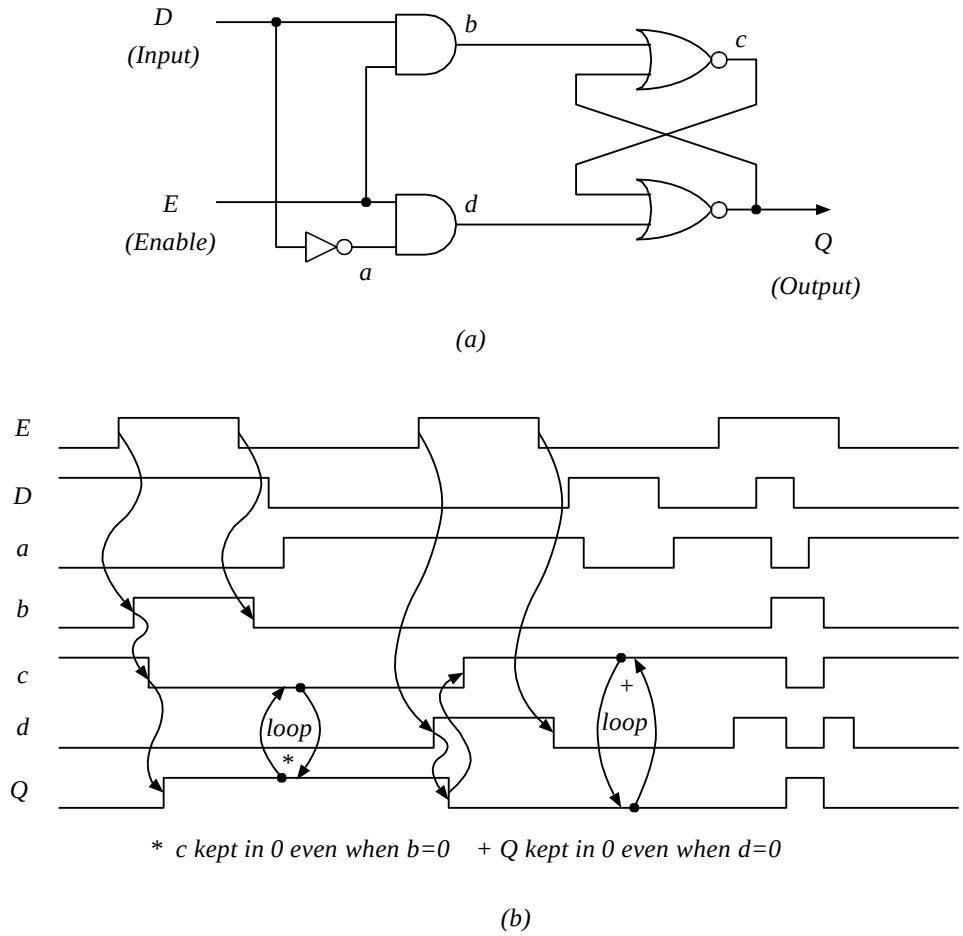

Figure 8.7: a) IMPLEMENTATION OF GATED-LATCH WITH NOR GATES. b) TIMING DIAGRAM.

LATCH WITH TRANSMISSION GATES

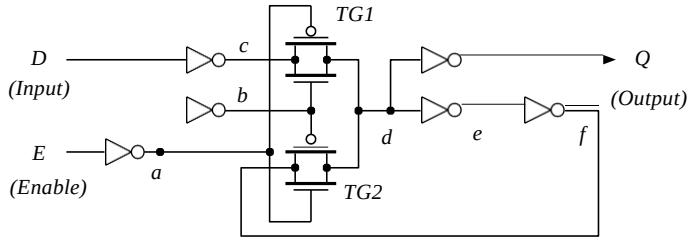

(a)

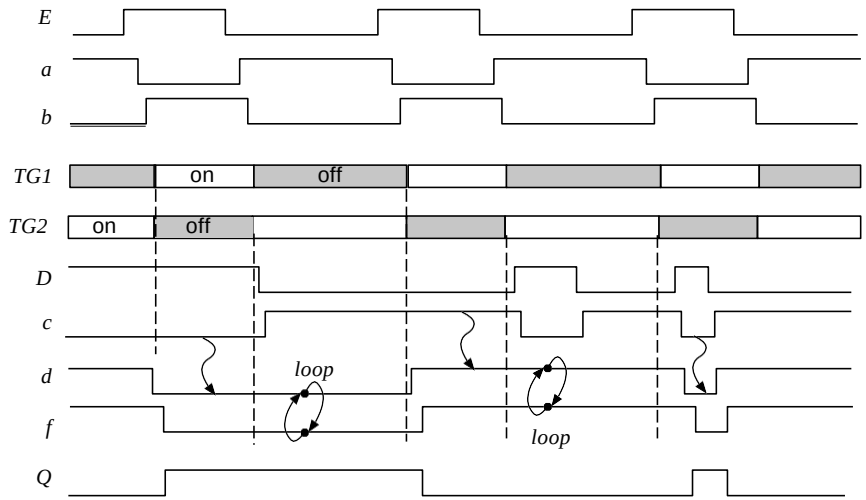

(b)

Figure 8.8: a) IMPLEMENTATION OF GATED-LATCH WITH TRANSMISSION GATES. b) TIMING DIAGRAM.

LIMITATIONS OF GATED-LATCH

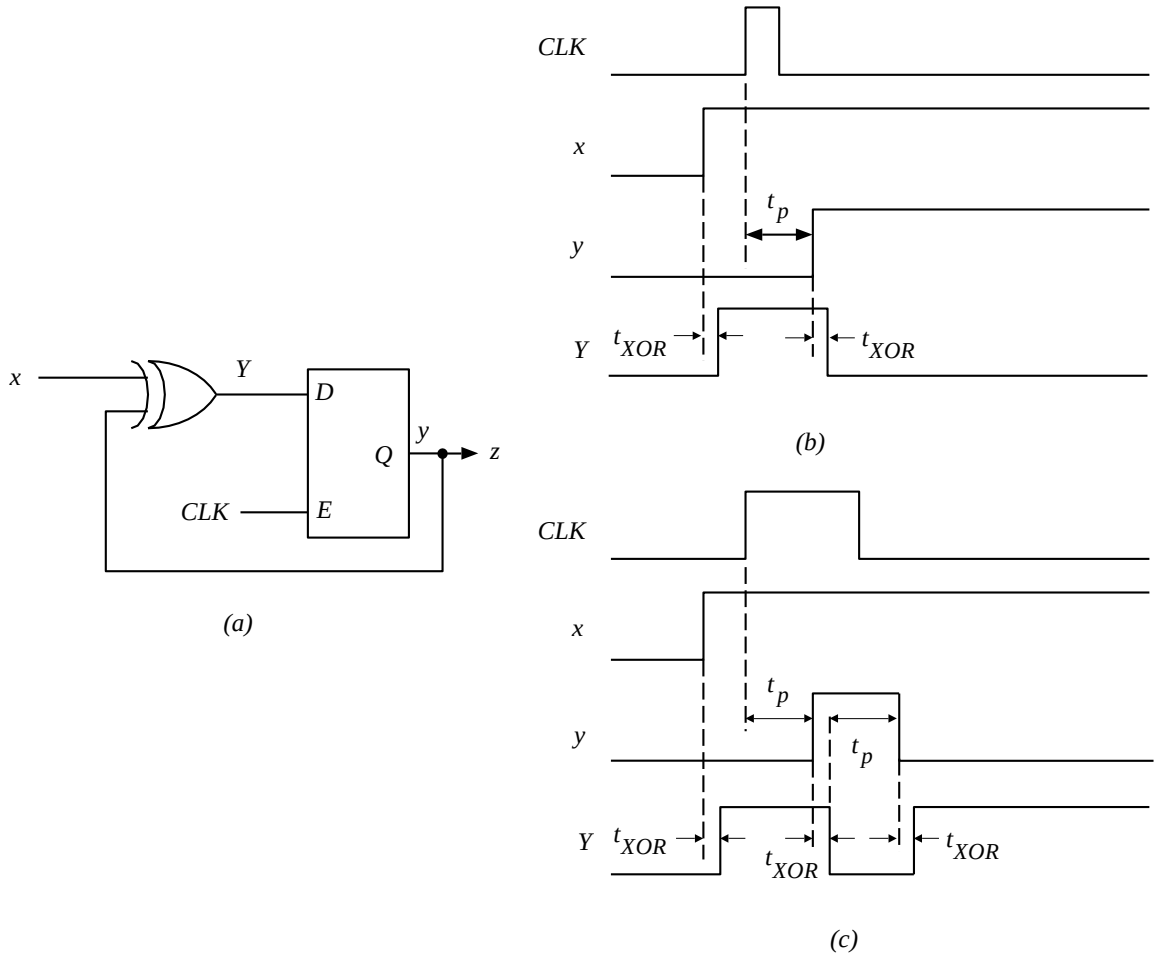

Figure 8.9: a) SEQUENTIAL NETWORK. b) CORRECT TIMING BEHAVIOR. c) INCORRECT TIMING BEHAVIOR.

A SOLUTION: EDGE-TRIGGERED CELL

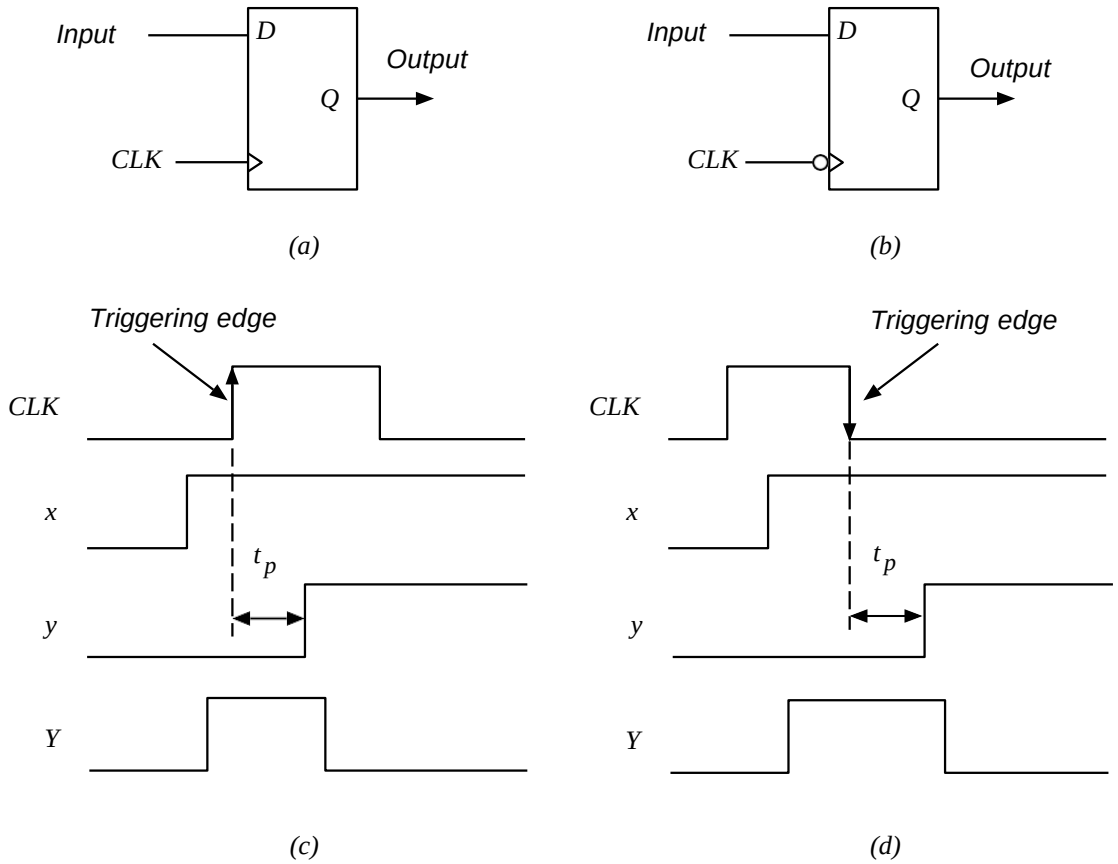

Figure 8.10: EDGE-TRIGGERED CELL: a) LEADING-EDGE-TRIGGERED CELL. b) TRAILING-EDGE-TRIGGERED CELL. c) LEADING-EDGE-TRIGGERED CELL IN NETWORK OF Figure 8.9. d) TRAILING-EDGE-TRIGGERED CELL IN NETWORK OF Figure 8.9.

IMPLEMENTATION: MASTER-SLAVE CELL

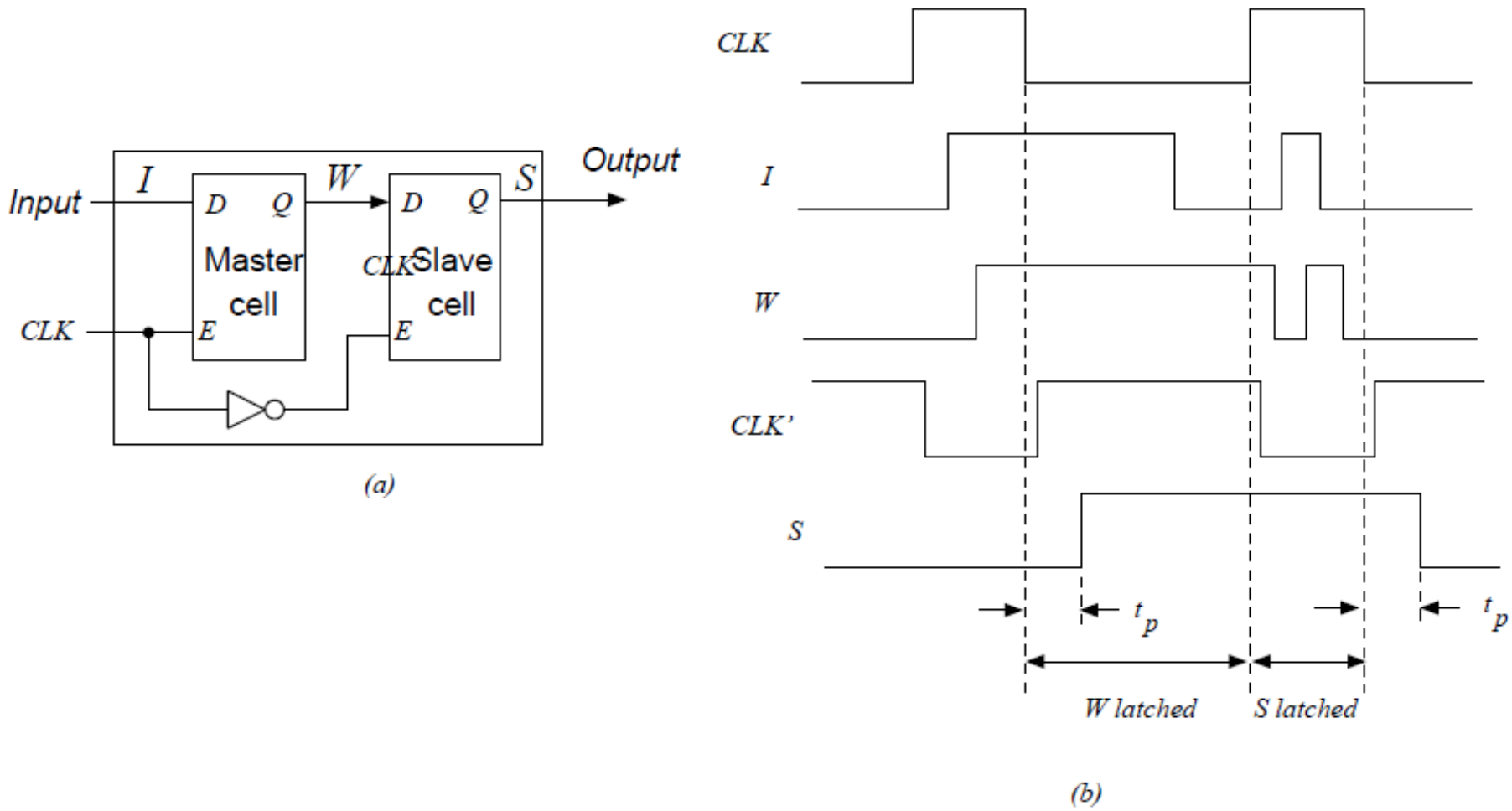

Figure 8.11: a) MASTER-SLAVE IMPLEMENTATION OF TRAILING-EDGE-TRIGGERED CELL. b) MASTER-SLAVE STATE CHANGE PROCESS.

PRACTICAL BASIC CELL: D flip-flop

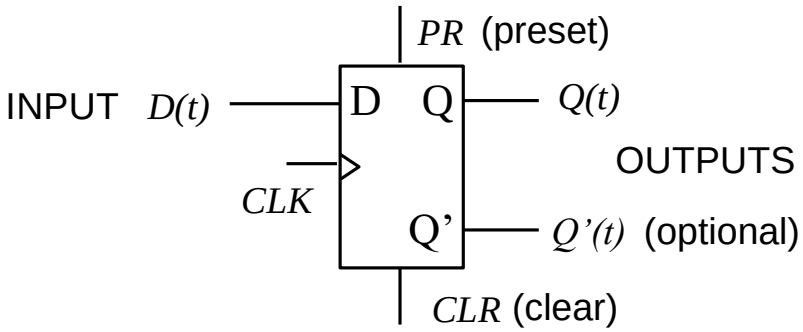

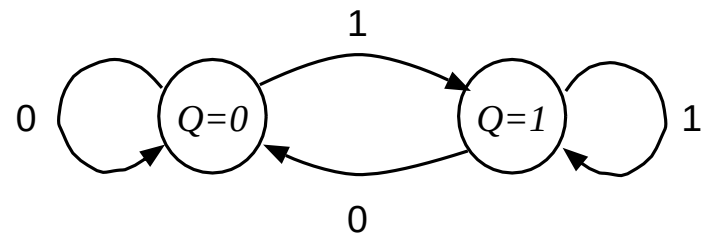

Figure 8.12: D FLIP-FLOP AND ITS STATE DIAGRAM.

$PS = Q(t)$	$D(t)$	
	0	1
0	0	1
1	0	1
	$NS = Q(t+1)$	

$$Q(t+1) = D(t)$$

TIMING PARAMETERS OF A BINARY CELL

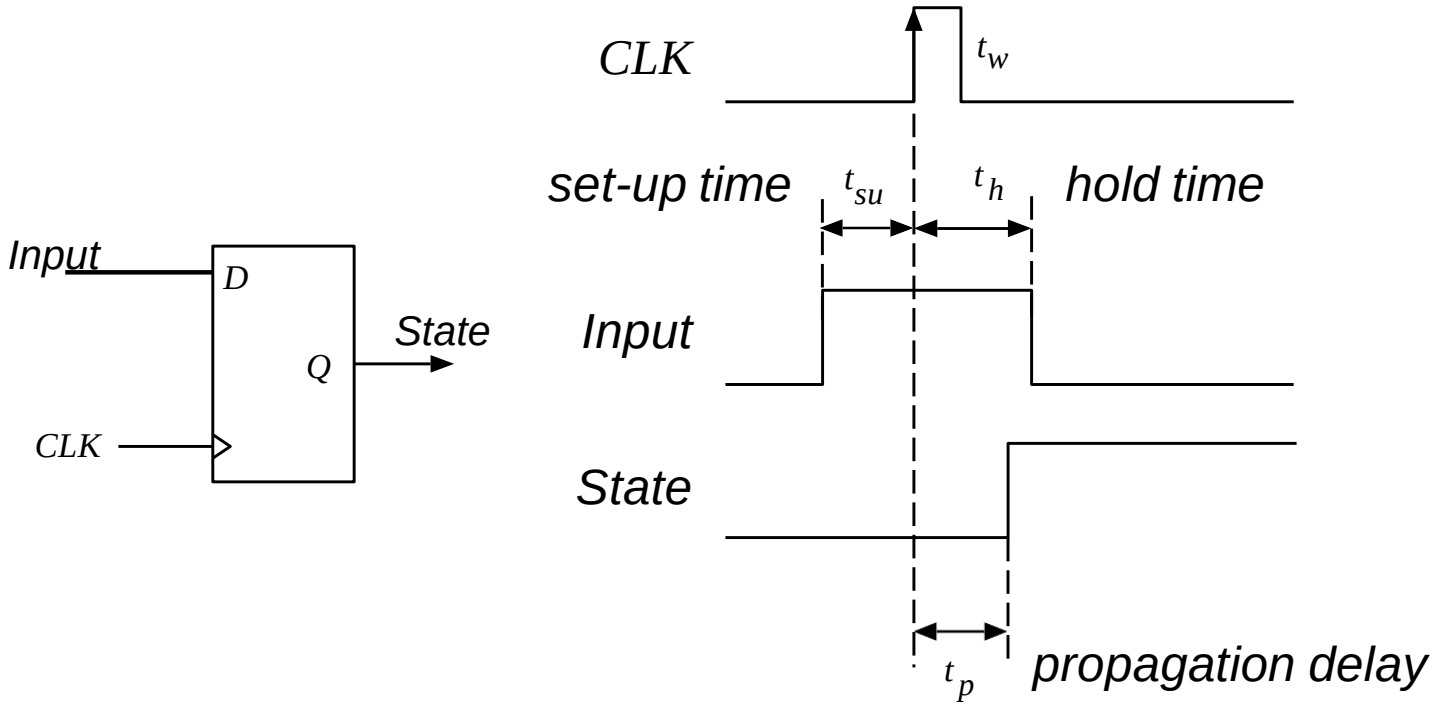

Figure 8.13: TIME BEHAVIOR OF CELL.

CHARACTERISTICS OF A CMOS D flip-flop

Delays					Input factor	Size
t_{pLH} [ns]	t_{pHL} [ns]	t_{su} [ns]	t_h [ns]	t_w [ns]	[std. loads]	[equiv. gates]
$0.49 + 0.038L$	$0.54 + 0.019L$	0.30	0.14	0.2	1	6

L: output load of the flip-flop

- THIS FLIP-FLOP HAS ONLY THE UNCOMPLEMENTED OUTPUT

TIMING CHARACTERISTICS OF SEQUENTIAL NETWORKS

- NETWORK SET-UP TIME: $t_{su}^{x}(net) = d1^{x} + t_{su}(cell)$

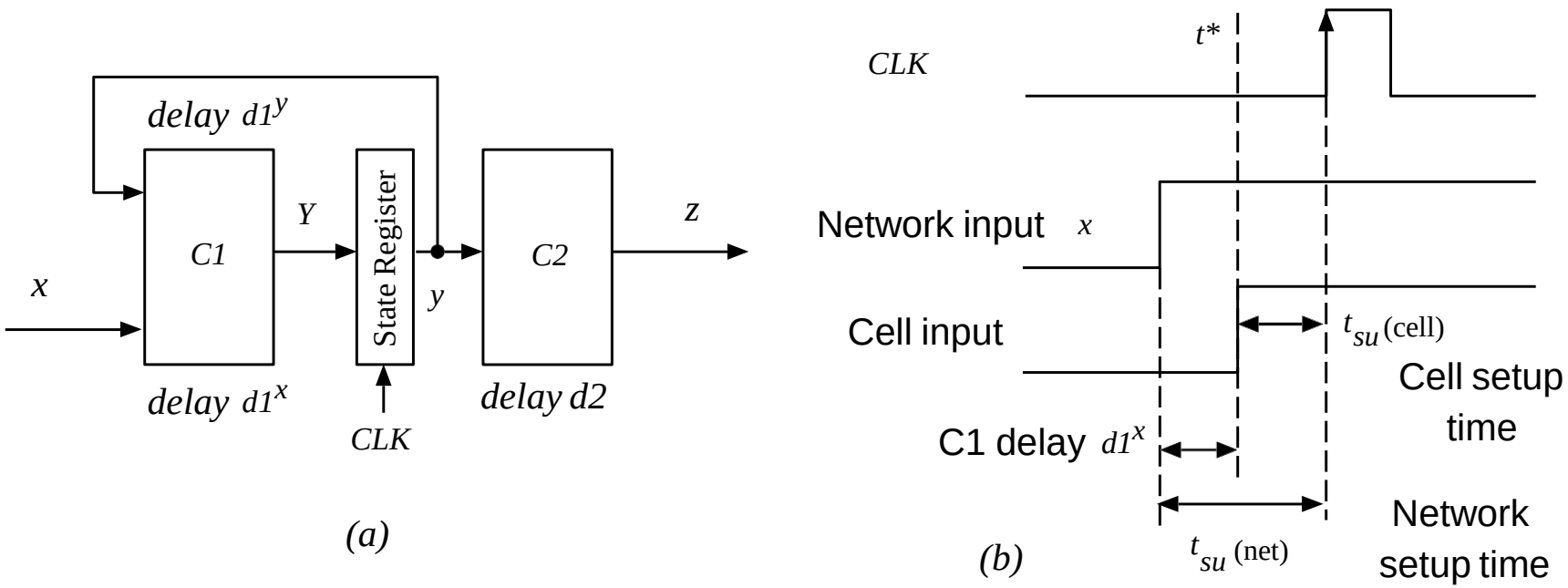

Figure 8.14: TIMING FACTORS IN SEQUENTIAL NETWORKS: a) THE NETWORK. b) NETWORK SET-UP TIME.

TIMING FACTORS (cont.)

- NETWORK HOLD TIME: $t_h(net) = t_h(cell)$

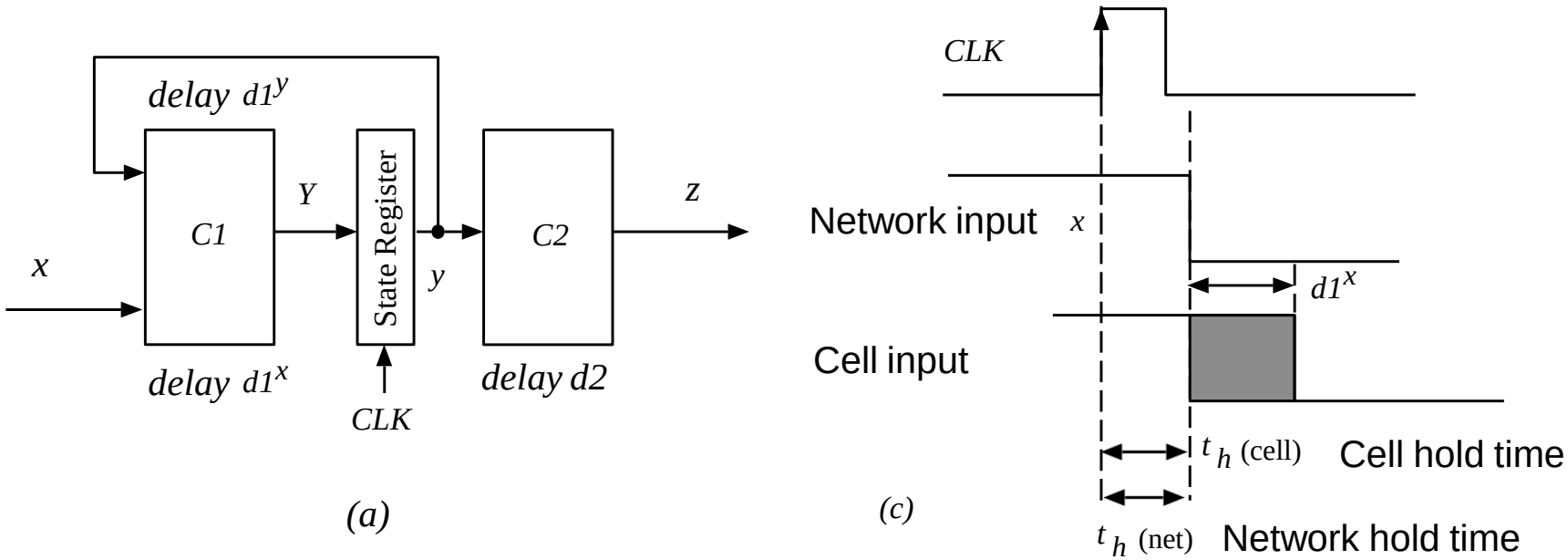

Figure 8.14: TIMING FACTORS IN SEQUENTIAL NETWORKS: a) THE NETWORK. c) NETWORK HOLD TIME.

TIMING FACTORS (Cont.)

- NETWORK PROPAGATION DELAY: $t_p(net) = t_p(cell) + d2$

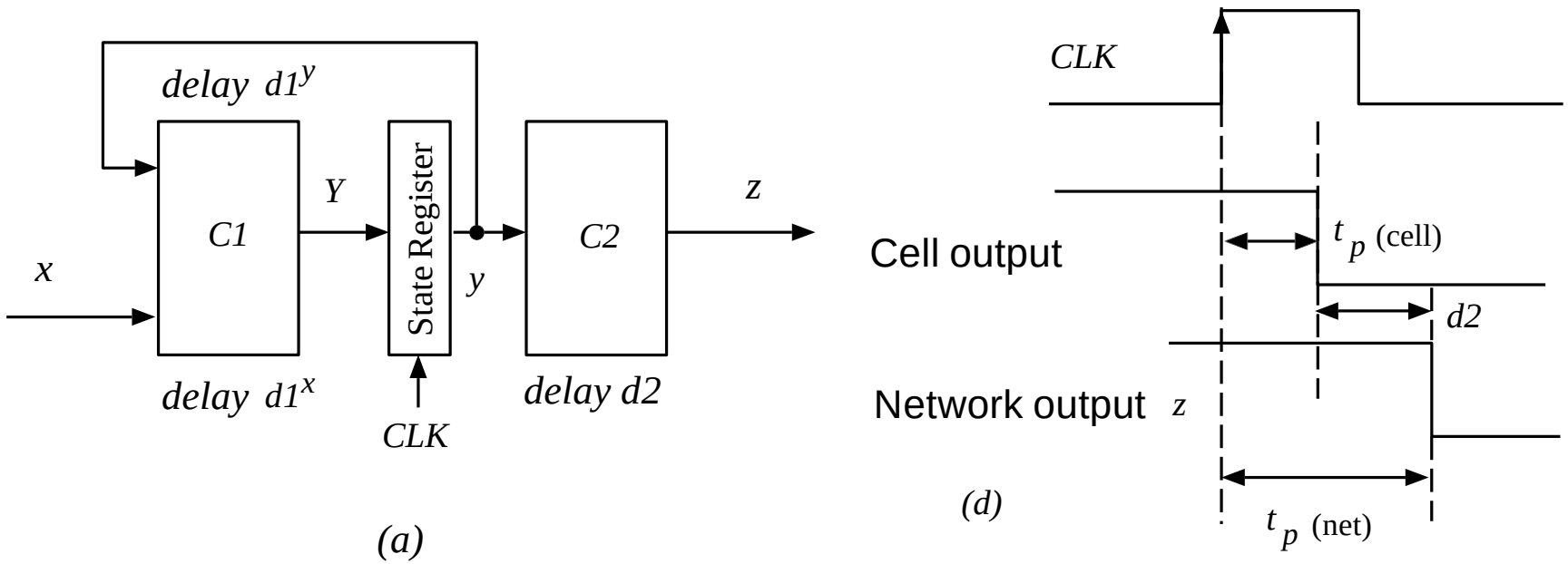

Figure 8.14: TIMING FACTORS IN SEQUENTIAL NETWORKS: a) THE NETWORK. d) NETWORK PROPAGATION DELAY.

MAXIMUM CLOCK FREQUENCY

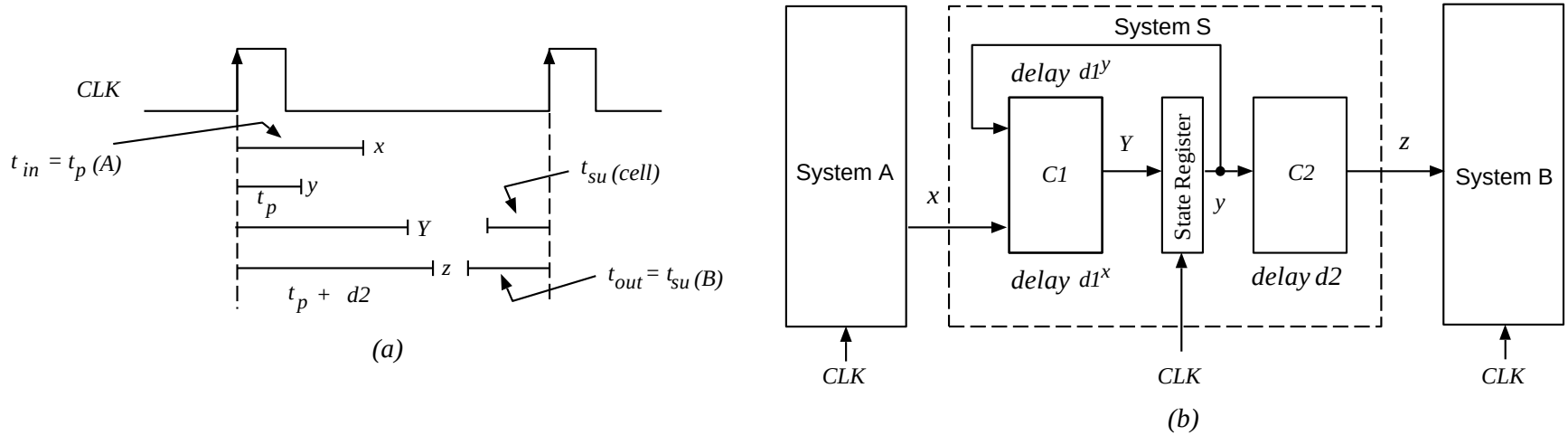

Figure 8.15: MAXIMUM CLOCK FREQUENCY: a) CLOCK PERIOD AND SIGNAL DELAYS. b) THE NETWORK.

- t_{in} - TIME BETWEEN TRIGGERING EDGE OF CLOCK AND STABILIZATION OF INPUT x
- t_{out} - TIME BETWEEN STABILIZATION OF OUTPUT z AND NEXT CLOCK TRIGGERING EDGE

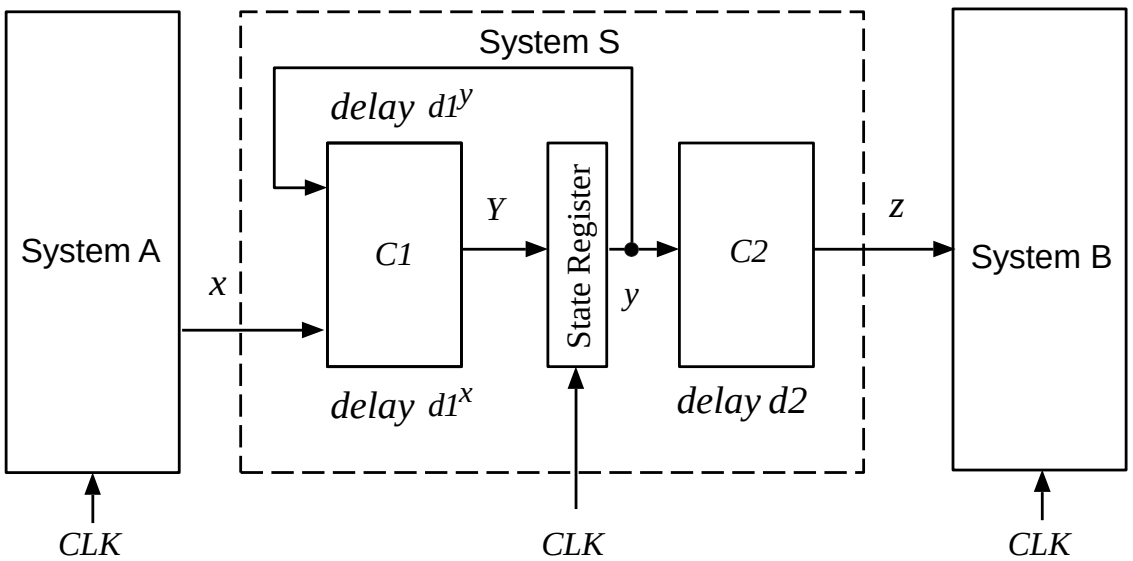

(b)

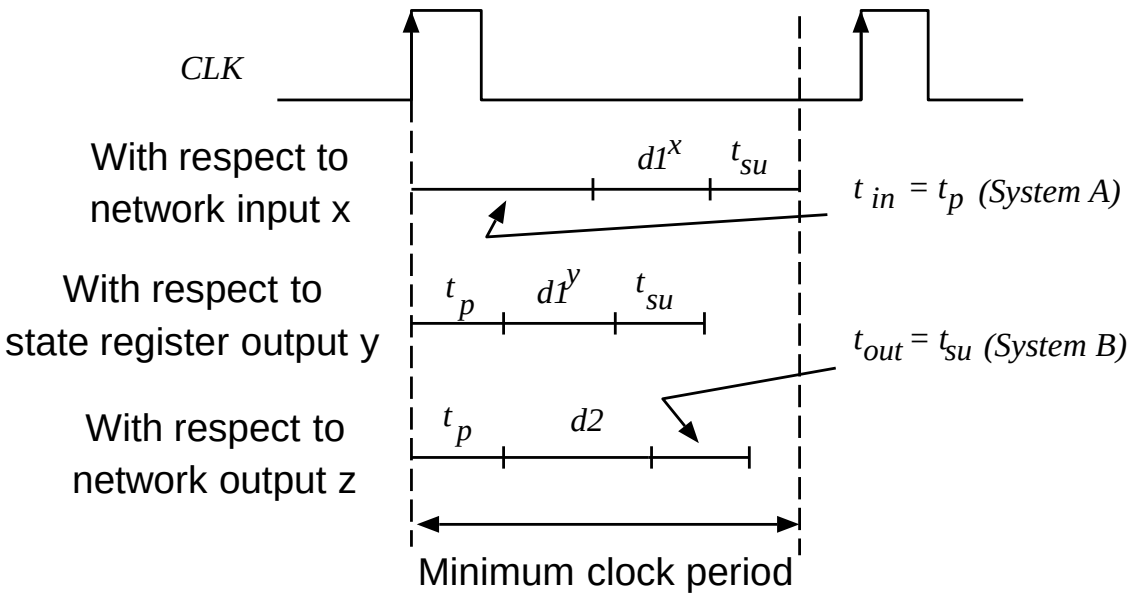

(c)

Figure 8.15: MAXIMUM CLOCK FREQUENCY: b) THE NETWORK. c) MINIMUM CLOCK PERIOD.

MAXIMUM CLOCK FREQUENCY (cont.)

$$T_{\min} = 1/f_{\max}$$

$$T_{\min} = \max[(t_{in} + t_{su}^{x}(net)),\ (t_p(cell) + t_{su}^{y}(net)),\ (t_p(net) + t_{out})]$$

$$T_{\min} = \max[(t_{in}+d1^{x}+t_{su}(cell)),\ (t_p(cell)+d1^{y}+t_{su}(cell)),\ (t_p(cell)+d2+t_{out})]$$

EXAMPLE 8.3

DETERMINE THE MAXIMUM CLOCK FREQUENCY

$$d1^x = d1^y = 2.5ns$$

$$d2 = 3ns$$

$$t_{su} = 0.3ns$$

$$t_p = 1ns$$

$$t_{in} = 2ns$$

$$t_{out} = 3ns$$

THE MINIMUM CLOCK PERIOD

$$T_{\min} = \max[(t_{in}+d1^x+t_{su}(cell)),\ (t_p(cell)+d1^y+t_{su}(cell)),\ (t_p(cell)+d2+t_{out})]$$

$$T_{\min} = \max[(2 + 2.5 + 0.3),\ (1 + 2.5 + 0.3),\ (1 + 3 + 3)] = 7[\text{ns}]$$

THE MAXIMUM FREQUENCY

$$f_{\max} = \frac{1}{7 \times 10^{-9}} \approx 140(\text{MHz})$$

CLOCK SKEW

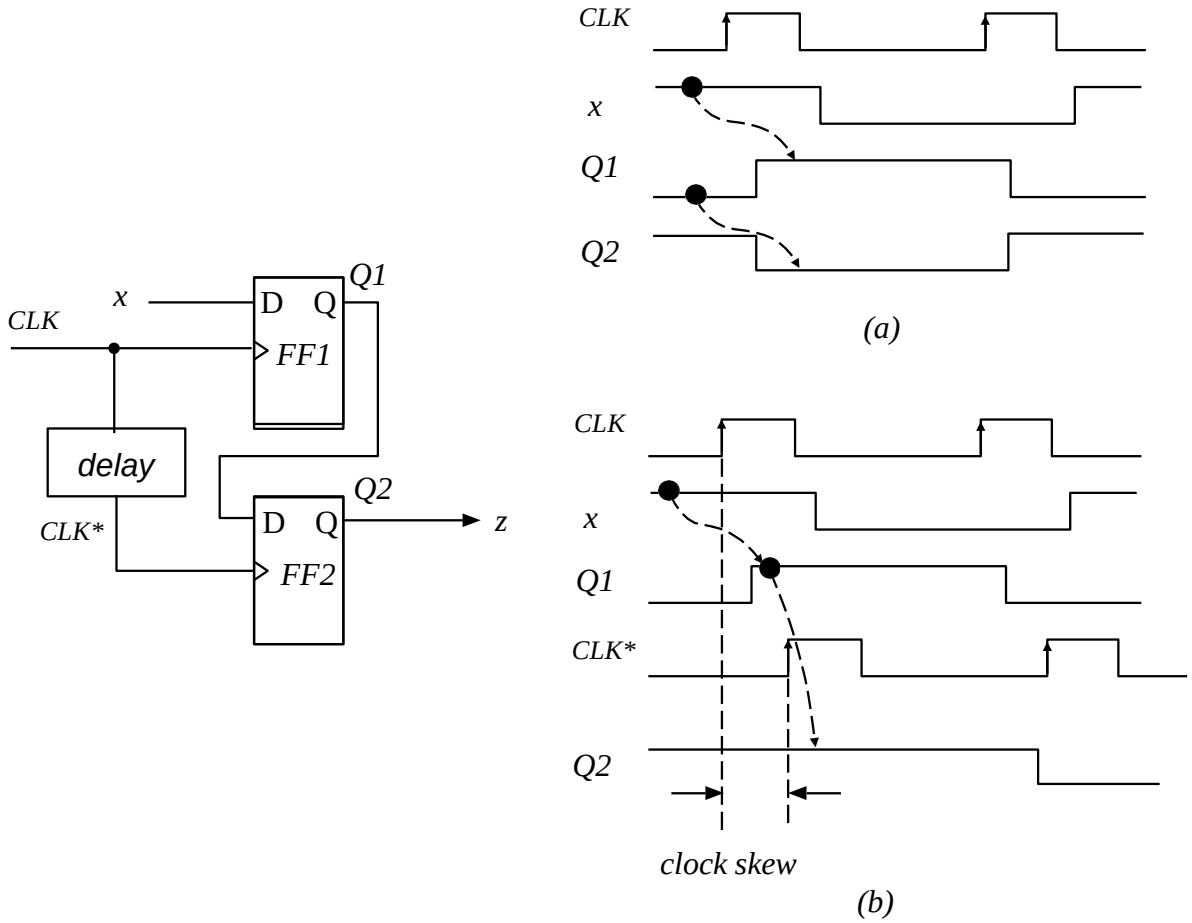

Figure 8.16: a) NETWORK BEHAVIOR WITHOUT CLOCK SKEW. b) NETWORK BEHAVIOR WITH INADMISSIBLE CLOCK SKEW.

Incorrect operation occurs if one cell receives the edge, change state, and the change propagates to the input of another cell before that cell receives its triggering edge.

ANALYSIS OF CANONICAL SEQUENTIAL NETWORKS

1. ANALYZE COMBINATIONAL NETWORK
   DETERMINE THE TRANSITION AND OUTPUT FUNCTIONS

2. DETERMINE HIGH-LEVEL SPECIFICATION.

3. IF DESIRED (OR REQUIRED), DETERMINE TIME BEHAVIOR

EXAMPLE 8.4: ANALYSIS

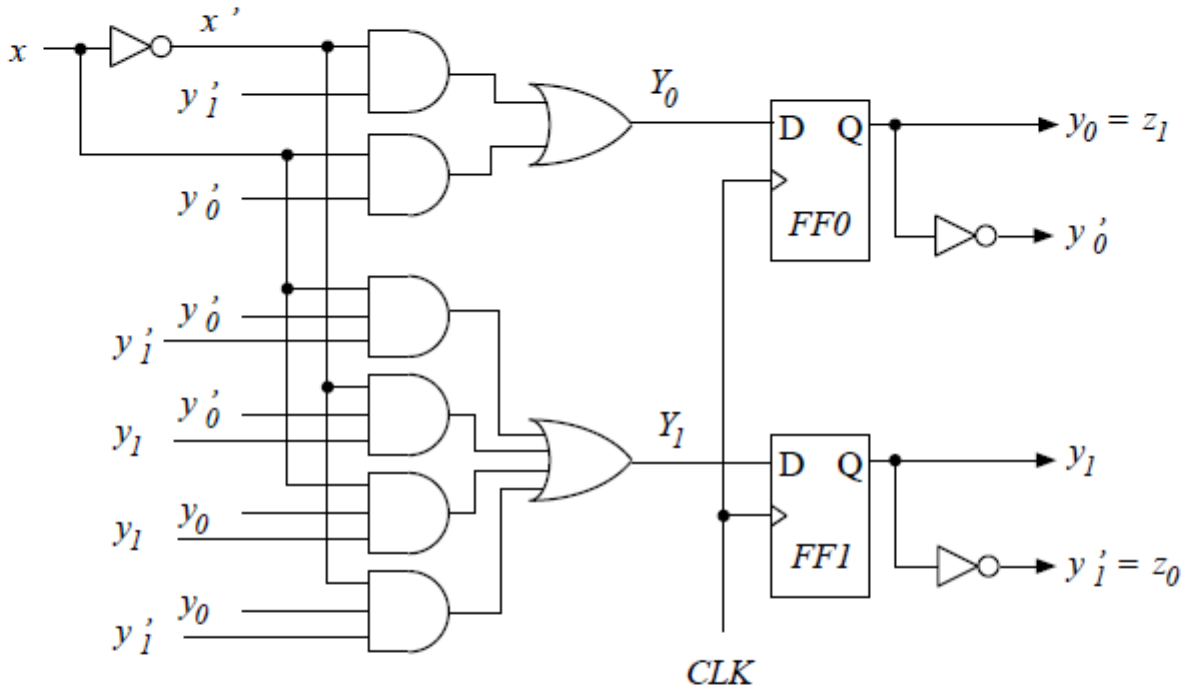

Figure 8.17: SEQUENTIAL NETWORK IN Example 8.4.

State transition

$$Y_0 = x'y_1' + xy_0'$$
$$Y_1 = xy_0'y_1' + x'y_0'y_1 + xy_0y_1 + x'y_0y_1'$$

Output

$$z_0 = y_1'$$
$$z_1 = y_0$$

EXAMPLE 8.4 (cont.)

- STATE-TRANSITION AND OUTPUT FUNCTIONS:

P S	Input		
y_1y_0	$x = 0$	$x = 1$	
00	01	11	01
01	11	00	11
10	10	01	00
11	00	10	10
	Y_1Y_0		z_1z_0
	N S		Output

- CODES:

x	x
0	a
1	b

z_1z_0	z
00	c
01	d
10	e
11	f

y_1y_0	s
00	S_0
01	S_1
10	S_2
11	S_3

EXAMPLE 8.4 (cont.)

- STATE DESCRIPTION:

Input: $x(t) \in \{a, b\}$
Output: $z(t) \in \{c, d, e, f\}$
State: $s(t) \in \{S_0, S_1, S_2, S_3\}$
Initial state: $s(0) = S_2$

Functions: The state-transition and output functions

PS	$x(t) = a$	$x(t) = b$	
S_0	S_1	S_3	d
S_1	S_3	S_0	f
S_2	S_2	S_1	c
S_3	S_0	S_2	e
	NS		$z(t)$

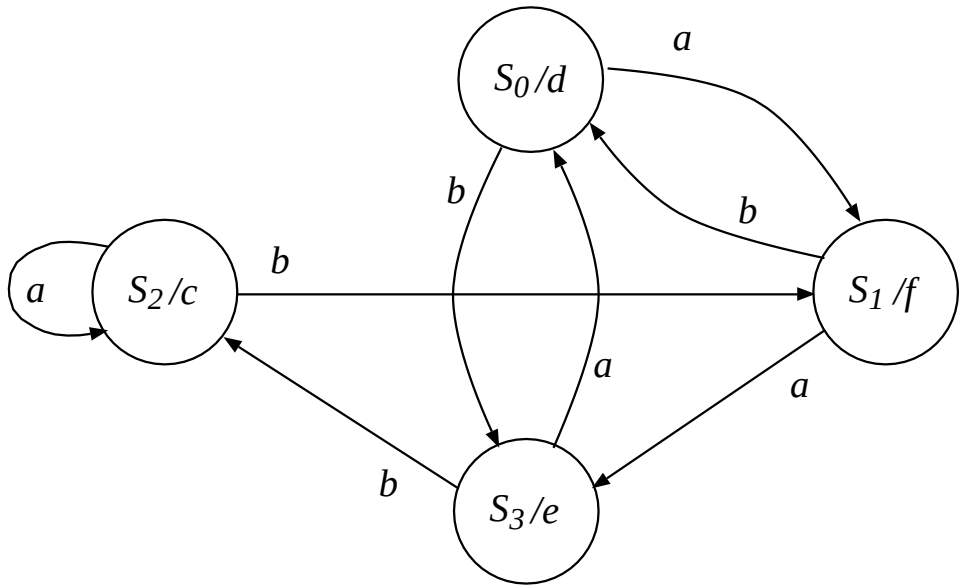

Figure 8.18: a) STATE DIAGRAM FOR SEQUENTIAL NETWORK.

$x(t)$	a	a	b	a	b	b	a	b	a	a	b	b	b	a	
$s(t)$	S_2	S_2	S_2	S_1	S_3	S_2	S_1	S_3	S_2	S_2	S_2	S_1	S_0	S_3	S_0
$z(t)$	c	c	c	f	e	c	f	e	c	c	c	f	d	e	d

Figure 8.18: b) A sequence of input-output pairs.

PROPAGATION DELAY x to z_0:

INPUT LOAD FACTORS:	I_x	=	4
SET-UP TIME:	$t_{su}(net)$	=	t_{pHL}(NOT) + t_{pHL}(AND3)
			$+t_{pHL}$(OR4) + t_{su}
		=	$(0.05 + 0.017 \times 3) + (0.18 + 0.018)$
			$+(0.45 + 0.025) + 0.3$
		=	1.07 [ns]
HOLD TIME:	$t_h(net)$	=	0.14 [ns]
PROPAGATION DELAY:	$t_p(z_0)$	=	t_{pLH}(ff) + t_{pHL}(NOT)
		=	$(0.49 + 0.038 \times 3)$
			$+(0.05 + 0.017 \times (L + 3))$
		=	$0.70 + 0.017L$ [ns]
			(load of NOT is $L + 3$, load of FF is 3)
SIZE:		=	$6 \times 2 + 2 + 3 + 2 \times 6 + 3 \times 1$
		=	32 equivalent gates.

DESIGN OF CANONICAL SEQUENTIAL NETWORKS

1. TRANSFORM THE TRANSITION AND OUTPUT FUNCTIONS

2. SPECIFY A STATE REGISTER TO ENCODE THE REQUIRED NUMBER OF STATES

3. DESIGN THE REQUIRED COMBINATIONAL NETWORK

EXAMPLE 8.5: DESIGN

Input: $x(t) \in \{a, b, c\}$
Output: $z(t) \in \{0, 1\}$
State: $s(t) \in \{A, B, C, D\}$
Initial state: $s(0) = A$

Functions: The state-transition and output functions

PS	Input		
	$x = a$	$x = b$	$x = c$
A	C,0	B,1	B,0
B	D,0	B,0	A,1
C	A,0	D,1	D,0
D	B,0	A,0	D,1
	NS, z		

EXAMPLE 8.5 (cont.)

- CODING:

Input code

x	x_1	x_0
a	0	1
b	1	0
c	1	1

State code

s	y_1	y_0
A	0	0
B	1	0
C	0	1
D	1	1

EXAMPLE 8.5 (cont.)

- STATE-TRANSITION AND OUTPUT FUNCTIONS

PS	x_1x_0		
y_1y_0	01	10	11
00	01,0	10,1	10,0
10	11,0	10,0	00,1
01	00,0	11,1	11,0
11	10,0	00,0	11,1
	$Y_1Y_0,\ z$		
	NS, Output		

Y_1:

$y_1 \backslash x_0x_1$	00	01	11	10
00	-	0	1	1
01	-	0	1	1
11	-	1	1	0
10	-	1	0	1

Y_0:

$y_1 \backslash x_0x_1$	00	01	11	10
00	-	1	0	0
01	-	0	1	1
11	-	0	1	0
10	-	1	0	0

z:

$y_1 \backslash x_0x_1$	00	01	11	10
00	-	0	0	1
01	-	0	0	1
11	-	0	1	0
10	-	0	1	0

$$
\begin{aligned}
Y_1 &= y_1'x_1 + y_1x_1' + y_0'x_0' + y_0x_1x_0 \\
Y_0 &= y_0'x_1' + y_1'y_0x_1 + y_0x_1x_0 \\
z &= y_1'x_0' + y_1x_1x_0
\end{aligned}
$$

EXAMPLE 8.5 (cont.)

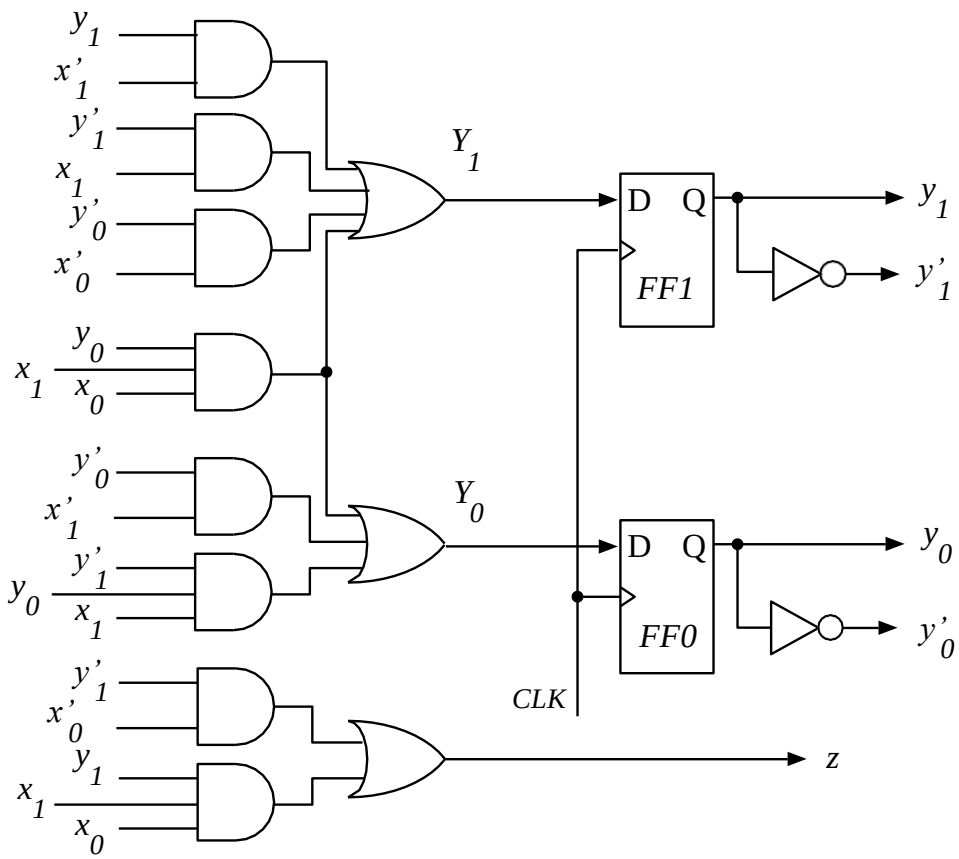

Figure 8.19: SEQUENTIAL NETWORK IN Example 8.5.

$$
\begin{aligned}
Y_1 &= y_1'x_1 + y_1x_1' + y_0'x_0' + y_0x_1x_0 \\
Y_0 &= y_0'x_1' + y_1'y_0x_1 + y_0x_1x_0 \\
z &= y_1'x_0' + y_1x_1x_0
\end{aligned}
$$

SR FLIP-FLOP

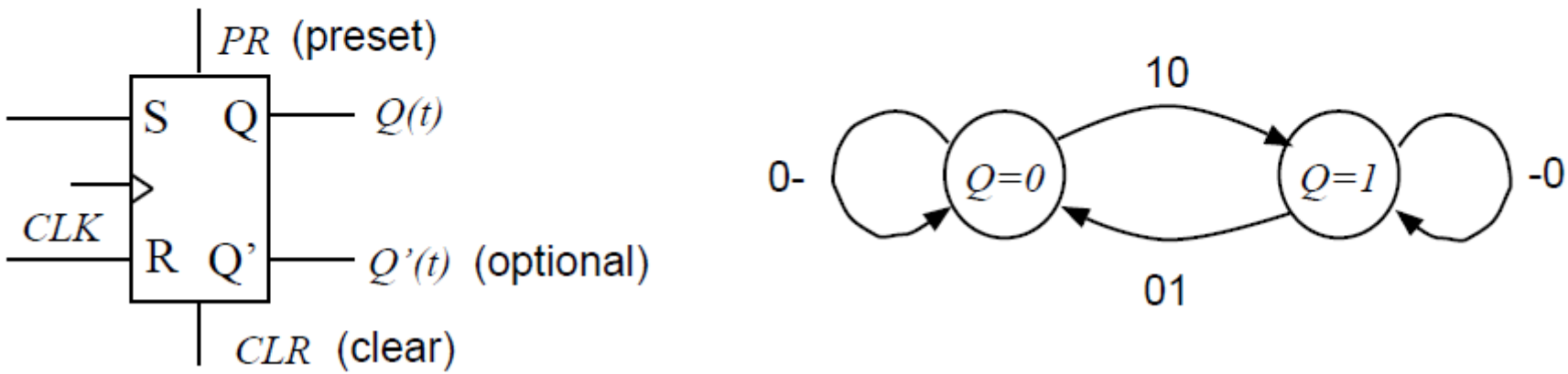

Figure 8.20: SR FLIP-FLOP AND ITS STATE DIAGRAM.

$PS = Q(t)$	$S(t)R(t)$			
	00	01	10	11
0	0	0	1	-
1	1	0	1	-
	$NS = Q(t+1)$			

$$Q(t+1) = Q(t)R'(t) + S(t) \text{ restriction: } R(t) \cdot S(t) = 0$$

JK FLIP-FLOP

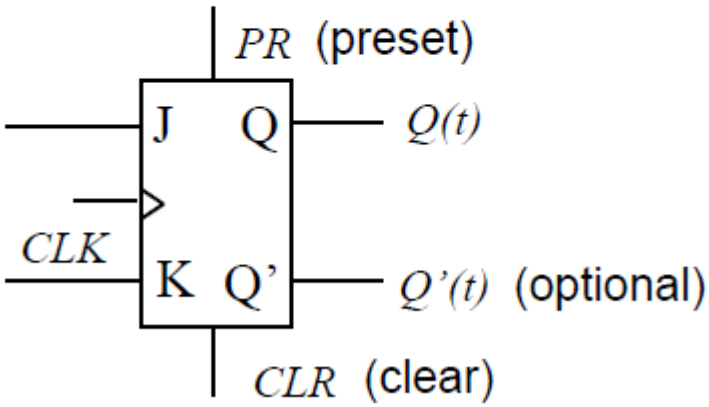

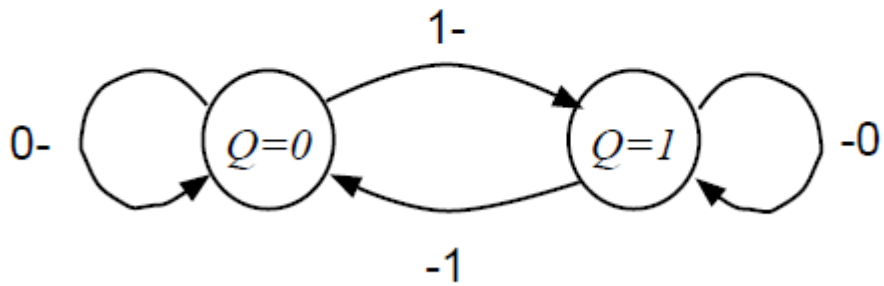

Figure 8.21: JK FLIP-FLOP AND ITS STATE DIAGRAM.

$PS = Q(t)$	$J(t)K(t)$			
	00	01	10	11
0	0	0	1	1
1	1	0	1	0
	$NS = Q(t+1)$			

$$Q(t+1) = Q(t)K'(t) + Q'(t)J(t)$$

T (Toggle) FLIP-FLOP

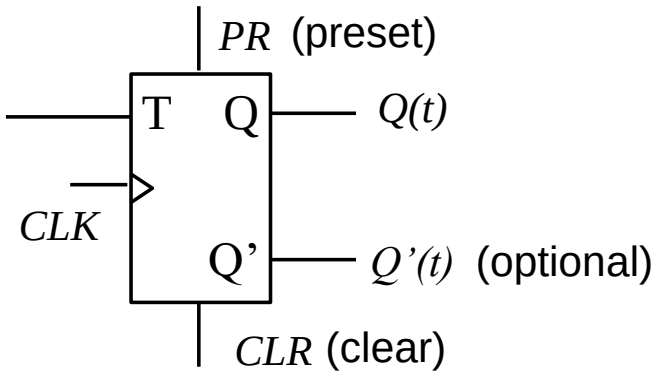

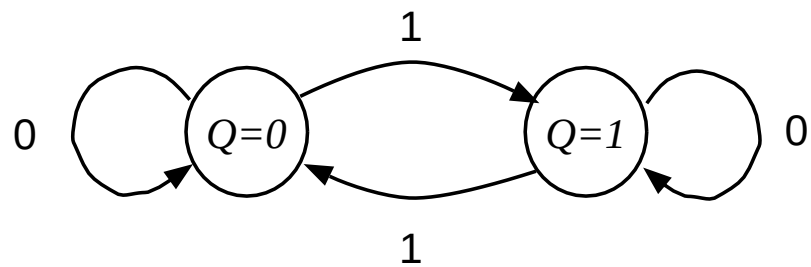

Figure 8.22: T FLIP-FLOP AND ITS STATE DIAGRAM.

$PS = Q(t)$	$T(t)$	
	0	1
0	0	1
1	1	0
	$NS = Q(t+1)$	

$$Q(t+1) = Q(t) \oplus T(t)$$

IMPLEMENTING ONE FF TYPE WITH ANOTHER

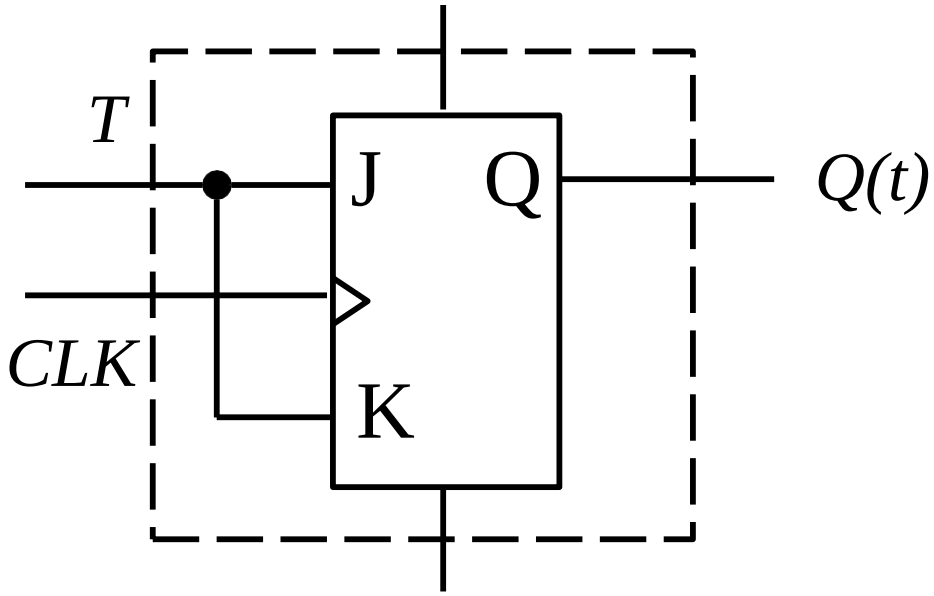

Figure 8.23: T FLIP-FLOP IMPLEMENTED WITH JK FLIP-FLOP.

ANALYSIS OF NETWORKS WITH FLIP-FLOPS

1. OBTAIN THE TRANSITION FUNCTION OF THE NETWORK
   (a) DETERMINE THE INPUTS TO THE FLIP-FLOPS
   (b) USE THE TRANSITION FUNCTION OF THE FLIP-FLOPS TO DETERMINE THE NEXT STATE

2. OBTAIN THE OUTPUT FUNCTION

3. DETERMINE A SUITABLE HIGH-LEVEL SPECIFICATION

CHARACTERISTICS OF A FAMILY OF CMOS FLIP-FLOPS

F F type	Delays					Input factor	Size
	t_{pLH} [ns]	t_{pHL} [ns]	t_{su} [ns]	t_h [ns]	t_w [ns]	[std. loads]	[equiv. gates]
D	$0.49 + 0.038L$	$0.54 + 0.019L$	0.30	0.14	0.20	1	6
J K	$0.45 + 0.038L$	$0.47 + 0.022L$	0.41	0.23	0.20	1	8

L: output load of the flip-flop

These flip-flops have only uncomplemented outputs

EXAMPLE 8.6: ANALYSIS

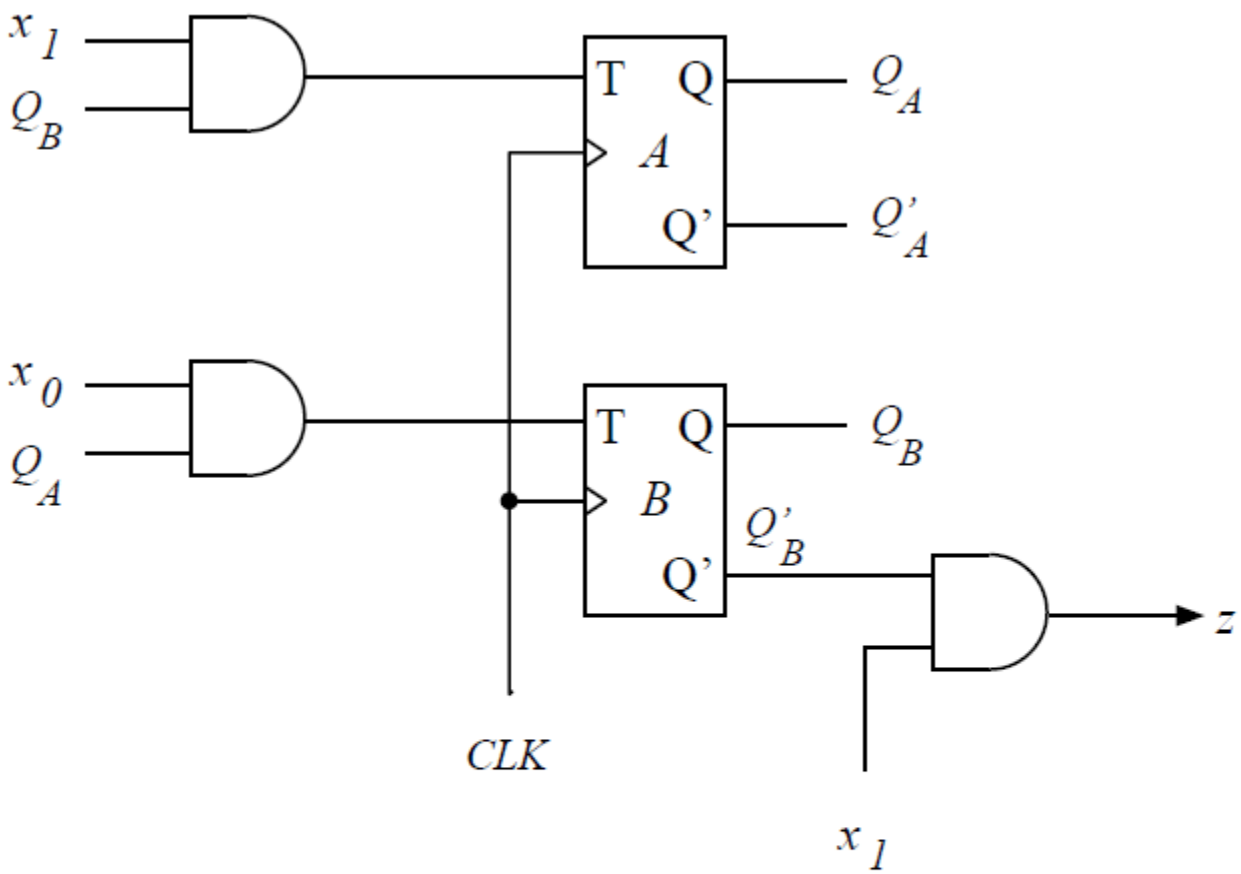

Figure 8.24: SEQUENTIAL NETWORK FOR Example 8.6.

$$
\begin{aligned}
T_A &= x_1 Q_B \qquad Q_A(t+1) = Q_A(t) \oplus x_1 Q_B(t) \\
T_B &= x_0 Q_A \qquad Q_B(t+1) = Q_B(t) \oplus x_0 Q_A(t) \\
z(t) &= x_1(t) Q'_B(t)
\end{aligned}
$$

EXAMPLE 8.6 (cont.)

- STATE-TRANSITION AND OUTPUT FUNCTIONS

PS	Input							
$Q_A Q_B$	$x_1 x_0$				$x_1 x_0$			
	00	01	10	11	00	01	10	11
00	00	00	00	00	0	0	1	1
01	01	01	11	11	0	0	0	0
10	10	11	10	11	0	0	1	1
11	11	10	01	00	0	0	0	0
	$Q_A Q_B$				z			
	NS				Output			

- CODING:

Q_A	Q_B	s
0	0	S_0
0	1	S_1
1	0	S_2
1	1	S_3

x_1	x_0	x
0	0	a
0	1	b
1	0	c
1	1	d

EXAMPLE 8.6 (cont.)

- HIGH-LEVEL DESCRIPTION:

Input: $x(t) \in \{a, b, c, d\}$
Output: $z(t) \in \{0, 1\}$
State: $s(t) \in \{S_0, S_1, S_2, S_3\}$
Initial state: $s(0) = S_0$

Functions: The state-transition and output functions

PS	x				x			
	a	b	c	d	a	b	c	d
S_0	S_0	S_0	S_0	S_0	0	0	1	1
S_1	S_1	S_1	S_3	S_3	0	0	0	0
S_2	S_2	S_3	S_2	S_3	0	0	1	1
S_3	S_3	S_2	S_1	S_0	0	0	0	0
	NS				z			

EXAMPLE 8.7: ANALYSIS

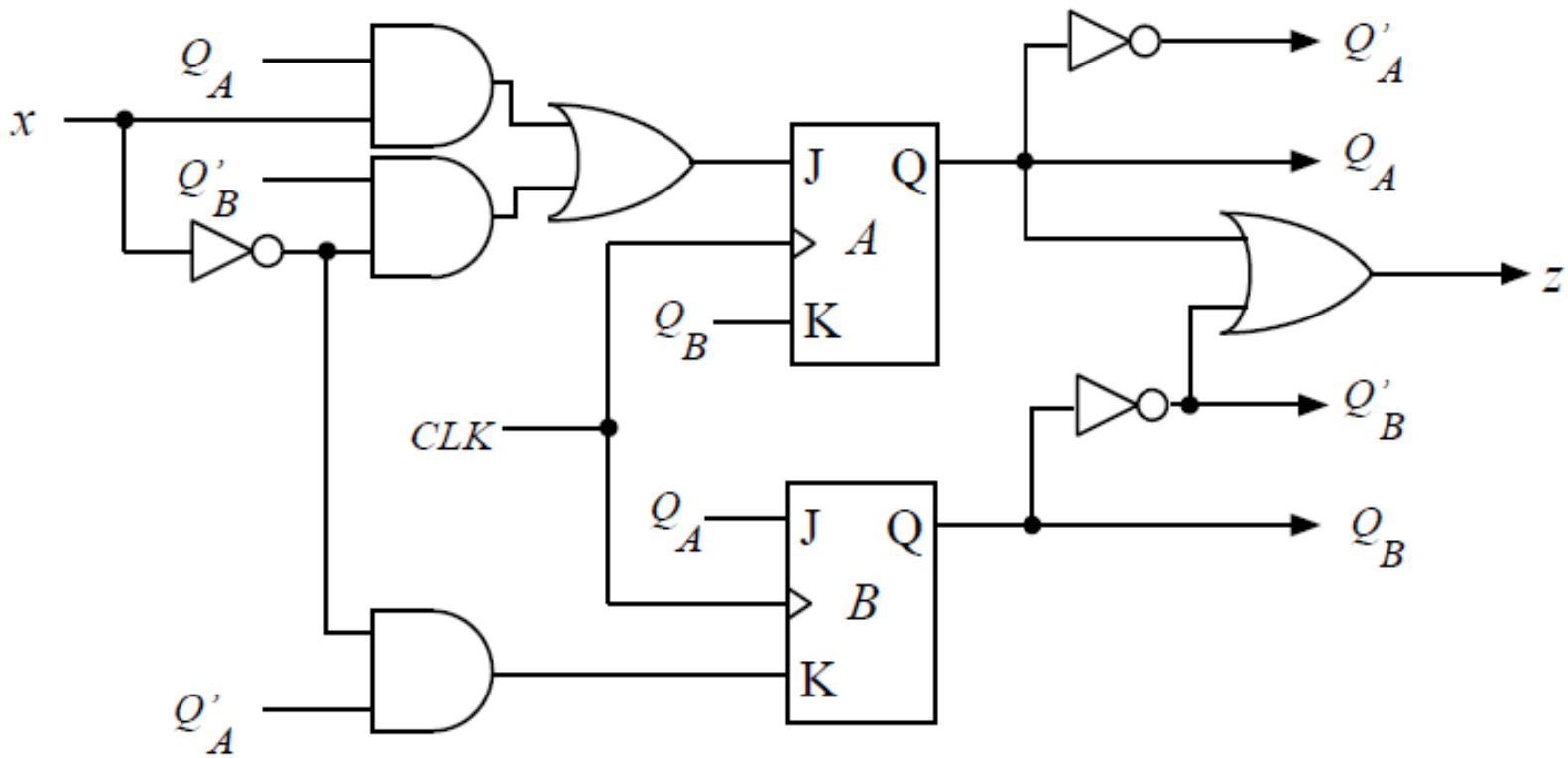

Figure 8.25: SEQUENTIAL NETWORK FOR Example 8.7

$$J_A = x'Q'_B + xQ_A \qquad K_A = Q_B$$
$$J_B = Q_A \qquad K_B = x'Q'_A$$

$$z = Q_A + Q'_B$$

EXAMPLE 8.7 (cont.)

$$J_A = x'Q'_B + xQ_A \qquad K_A = Q_B$$
$$J_B = Q_A \qquad K_B = x'Q'_A$$

$$z = Q_A + Q'_B$$

$$\begin{aligned} Q_A(t+1) &= Q_A K'_A + Q'_A J_A \\ &= Q_A Q'_B + Q'_A(x'Q'_B + xQ_A) \\ &= Q'_B(Q_A + x') \end{aligned}$$

$$\begin{aligned} Q_B(t+1) &= Q_B K'_B + Q'_B J_B \\ &= Q_B(x + Q_A) + Q'_B Q_A \\ &= Q_B x + Q_A \end{aligned}$$

EXAMPLE 8.7 (cont.)

- STATE-TRANSITION AND OUTPUT FUNCTIONS

PS	NS		Output
	$x = 0$	$x = 1$	z
$Q_A Q_B$	$Q_A Q_B$	$Q_A Q_B$	
00	10	00	1
01	00	01	0
10	11	11	1
11	01	01	1

- STATE CODING

Q_A	Q_B	S
0	0	S_0
0	1	S_1
1	0	S_2
1	1	S_3

EXAMPLE 8.7 (cont.)

- HIGH-LEVEL DESCRIPTION

Input: $x(t) \in \{0, 1\}$
Output: $z(t) \in \{0, 1\}$
State: $s(t) \in \{S_0, S_1, S_2, S_3\}$
Initial state: $s(0) = S_0$

Functions: The state-transition and output functions

PS	Input $x = 0$	$x = 1$	
S_0	S_2	S_0	1
S_1	S_0	S_1	0
S_2	S_3	S_3	1
S_3	S_1	S_1	1
	NS		z

EXAMPLE 8.7 (cont.)

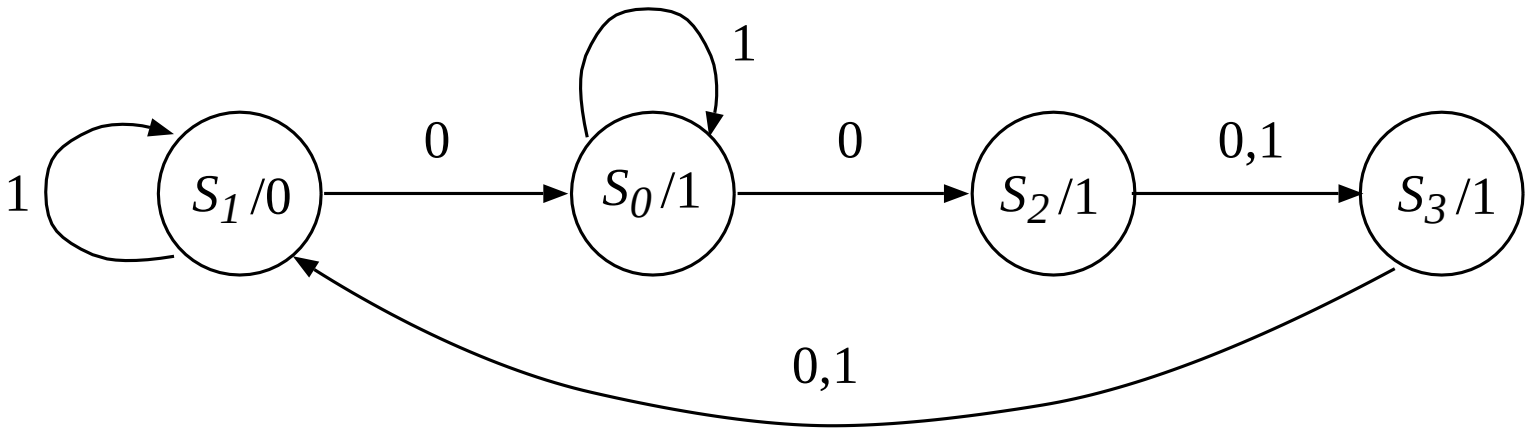

Figure 8.26: STATE DIAGRAM IN Example 8.7.

OTHER CHARACTERISTICS (Example 8.6)

INPUT LOAD FACTOR: $I_x = 2$

SET-UP TIME:

$$t_{su}(net) = t_{pLH}(\text{NOT}) + t_{pLH}(\text{AND}) + t_{pLH}(\text{OR}) + t_{su}(FF)$$
$$= (0.02 + 0.038 \times 2) + (0.15 + 0.037) + (0.12 + 0.037) + 0.41$$
$$= 0.86 \text{ [ns]}$$

HOLD TIME: $t_h(net) = 0.23$ [ns]

PROPAGATION DELAY:

$$t_p(net) = t_{pHL}(\text{ff}) + t_{pLH}(\text{NOT}) + t_{pLH}(\text{OR})$$
$$= (0.47 + 0.022 \times 2) + (0.02 + 0.038 \times 2) + (0.12 + 0.037L)$$
$$= 0.73 + 0.037L \text{ [ns]}$$

SIZE:

$$= 3 + 2 \times 5 + 8 \times 2$$
$$= 29 \text{ equivalent gates}$$

DESIGN OF SEQUENTIAL FLIP-FLOP NETWORKS

- EXCITATION TABLE

from	to	inputs should be
$Q(t) = 0$	$Q(t+1) = 0$	$S(t) = 0, R(t) = dc$
$Q(t) = 0$	$Q(t+1) = 1$	$S(t) = 1, R(t) = 0$
$Q(t) = 1$	$Q(t+1) = 0$	$S(t) = 0, R(t) = 1$
$Q(t) = 1$	$Q(t+1) = 1$	$S(t) = dc, R(t) = 0$

$PS = Q(t)$	$S(t)R(t)$			
	00	01	10	11
0	0	0	1	-
1	1	0	1	-
	$NS = Q(t+1)$			

EXCITATION FUNCTIONS

D flip-flop

PS	NS	
	0	1
0	0	1
1	0	1
	$D(t)$	

$$D(t) = Q(t+1)$$

SR flip-flop

PS	NS	
	0	1
0	0-	10
1	01	-0
	$S(t)R(t)$	

JK flip-flop

PS	NS	
	0	1
0	0-	1-
1	-1	-0
	$J(t)K(t)$	

T flip-flop

PS	NS	
	0	1
0	0	1
1	1	0
	$T(t)$	

$$T(t) = Q(t) \oplus Q(t+1)$$

SR FF

PS	NS	S(t)	R(t)
0	0	0	X
0	1	1	0
1	0	0	1
1	1	X	0

JK FF

PS	NS	J(t)	K(t)
0	0	0	X
0	1	1	X
1	0	X	1
1	1	X	0

D FF

PS	NS	D(t)
0	0	0
0	1	1
1	0	0
1	1	1

T FF

PS	NS	D(t)
0	0	0
0	1	1
1	0	1
1	1	0

EXCITATION TABLE

THE DESIGN PROCEDURE

1. OBTAIN A BINARY DESCRIPTION OF THE SYSTEM

2. SELECT THE TYPE OF FLIP-FLOP

3. DETERMINE THE INPUTS TO THE FLIP-FLOPS (use the excitation function)

4. DESIGN A COMBINATIONAL NETWORK

EXAMPLE 8.8: DESIGN MODULO-5 COUNTER

- USE T FLIP-FLOPS

Input: $x(t) \in \{0, 1\}$
Output: $z(t) \in \{0, 1, 2, 3, 4\}$
State: $s(t) \in \{S_0, S_1, S_2, S_3, S_4\}$
Initial state: $s(0) = S_0$

Functions: Counts modulo-5, i.e., (0,1,2,3,4,0,1,2,3,4,0...),

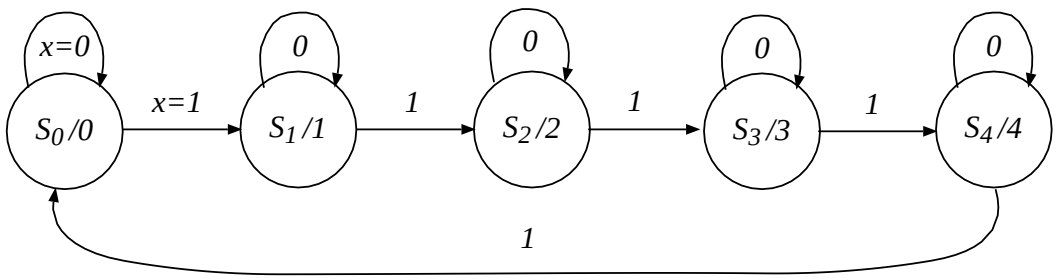

Figure 8.27: STATE DIAGRAM FOR Example 8.8.

EXAMPLE 8.8 (cont.)

z	z_2	z_1	z_0
0	0	0	0
1	0	0	1
2	0	1	0
3	0	1	1
4	1	0	0

PS	Input		Input	
$Q_2Q_1Q_0$	$x = 0$	$x = 1$	$x = 0$	$x = 1$
000	000	001	000	001
001	001	010	000	011
010	010	011	000	001
011	011	100	000	111
100	100	000	000	100
	NS		$T_2T_1T_0$	

DON'T CARES: 5, 6, AND 7

EXAMPLE 8.8 (cont.)

T_2:

$Q_2 \backslash Q_1 Q_0$	$\overline{x}\,\overline{x}$	$\overline{x}\,x$	$x\,x$	$x\,\overline{x}$
$\overline{Q_2}\,\overline{Q_1}$	0	0	0	0
$\overline{Q_2}\,Q_1$	0	0	1	0
$Q_2\,Q_1$	-	-	-	-
$Q_2\,\overline{Q_1}$	0	1	-	-

T_1:

$Q_2 \backslash Q_1 Q_0$	$\overline{x}\,\overline{x}$	$\overline{x}\,x$	$x\,x$	$x\,\overline{x}$
$\overline{Q_2}\,\overline{Q_1}$	0	0	1	0
$\overline{Q_2}\,Q_1$	0	0	1	0
$Q_2\,Q_1$	-	-	-	-
$Q_2\,\overline{Q_1}$	0	0	-	-

T_0:

$Q_2 \backslash Q_1 Q_0$	$\overline{x}\,\overline{x}$	$\overline{x}\,x$	$x\,x$	$x\,\overline{x}$
$\overline{Q_2}\,\overline{Q_1}$	0	1	1	0
$\overline{Q_2}\,Q_1$	0	1	1	0
$Q_2\,Q_1$	-	-	-	-
$Q_2\,\overline{Q_1}$	0	0	-	-

$$T_2 = xQ_2 + xQ_1Q_0$$
$$T_1 = xQ_0$$
$$T_0 = xQ_2'$$

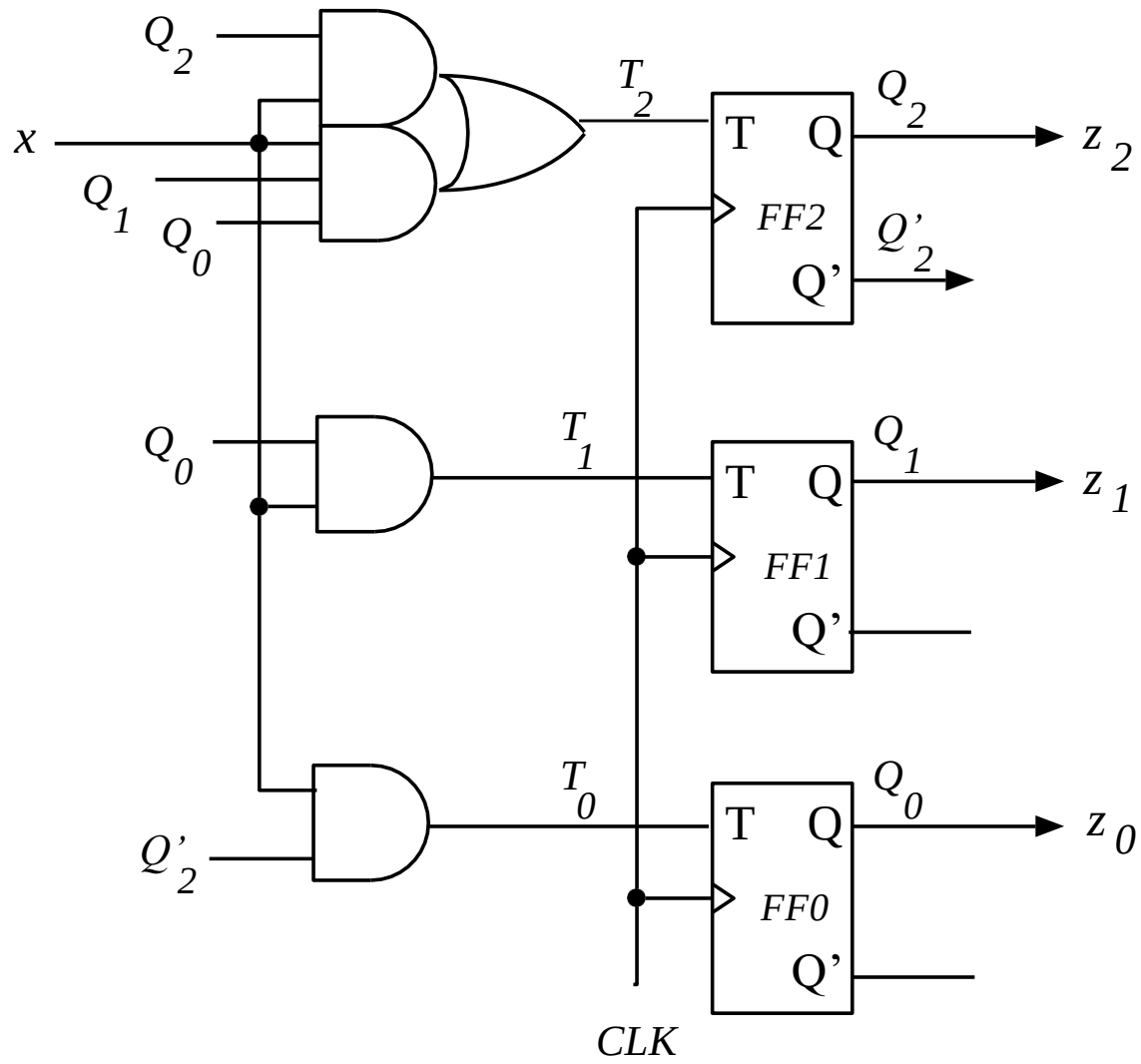

Figure 8.28: SEQUENTIAL NETWORK IN Example 8.8.

EXAMPLE 8.9: DESIGN

Input: $\underline{x}(t) = (x_1, x_0), \; x_i \in \{0, 1\}$

Output: $z(t) \in \{0, 1\}$

State: $s(t) \in \{a, b, c, d\}$

Initial state: $s(0) = a$

Functions: The transition and output functions

PS	x_1x_0		
	01	10	11
a	b,0	c,1	c,0
b	a,0	d,1	d,0
c	d,0	c,0	a,1
d	c,0	a,0	d,1
	NS, z		

EXAMPLE 8.9 (CONT.)

State	Q_1Q_0
a	00
b	01
c	10
d	11

PS	x_1x_0		
Q_1Q_0	01	10	11
00	01	10	10
01	00	11	11
10	11	10	00
11	10	00	11
	NS		

$Q(t)$	$Q(t+1)$	S	R
0	0	0	-
0	1	1	0
1	0	0	1
1	1	-	0

01		10		11	
S1R1	S0R0	S1R1	S0R0	S1R1	S0R0
0 X	1 0	1 0	0 X	1 0	0 X
0 X	0 1	1 0	X 0	1 0	X 0
X 0	1 0	X 0	0 X	0 1	0 X
X 0	0 1	0 1	0 1	X 0	X 0

01		10		11	
S1R1	S0R0	S1R1	S0R0	S1R1	S0R0
0 X	1 0	1 0	0 X	1 0	0 X
0 X	0 1	1 0	X 0	1 0	X 0
X 0	1 0	X 0	0 X	0 1	0 X
X 0	0 1	0 1	0 1	X 0	X 0

S_1:

$Q_1 \backslash Q_0$	$\overline{x_0}\,\overline{x_1}$	$\overline{x_0}\,x_1$	$x_0\,x_1$	$x_0\,\overline{x_1}$
	-	0	1	1
	-	0	1	1
	-	-	-	0
	-	-	0	-

R_1:

$Q_1 \backslash Q_0$	$\overline{x_0}\,\overline{x_1}$	$\overline{x_0}\,x_1$	$x_0\,x_1$	$x_0\,\overline{x_1}$
	-	-	0	0
	-	-	0	0
	-	0	0	1
	-	0	1	0

S_0:

$Q_1 \backslash Q_0$	$\overline{x_0}\,\overline{x_1}$	$\overline{x_0}\,x_1$	$x_0\,x_1$	$x_0\,\overline{x_1}$
	-	1	0	0
	-	0	-	-
	-	0	-	0
	-	1	0	0

R_0:

$Q_1 \backslash Q_0$	$\overline{x_0}\,\overline{x_1}$	$\overline{x_0}\,x_1$	$x_0\,x_1$	$x_0\,\overline{x_1}$
	-	0	-	-
	-	1	0	0
	-	1	0	1
	-	0	-	-

$$
\begin{aligned}
S_1 &= x_1 Q_1' \\
R_1 &= x_0' Q_1 Q_0 + x_1 x_0 Q_1 Q_0' \\
S_0 &= x_1' Q_0' \\
R_0 &= x_1' Q_0 + x_0' Q_1
\end{aligned}
$$

z:

	$\overline{x_0}$			
	-	0	0	1
	-	0	0	1
Q_1	-	0	1	0
	-	0	1	0
			$\overline{x_1}$	

Q_0

THE OUTPUT EXPRESSION IS

$$z = x_0' Q_1' + x_1 x_0 Q_1$$

EXAMPLE 8.9 (cont.)

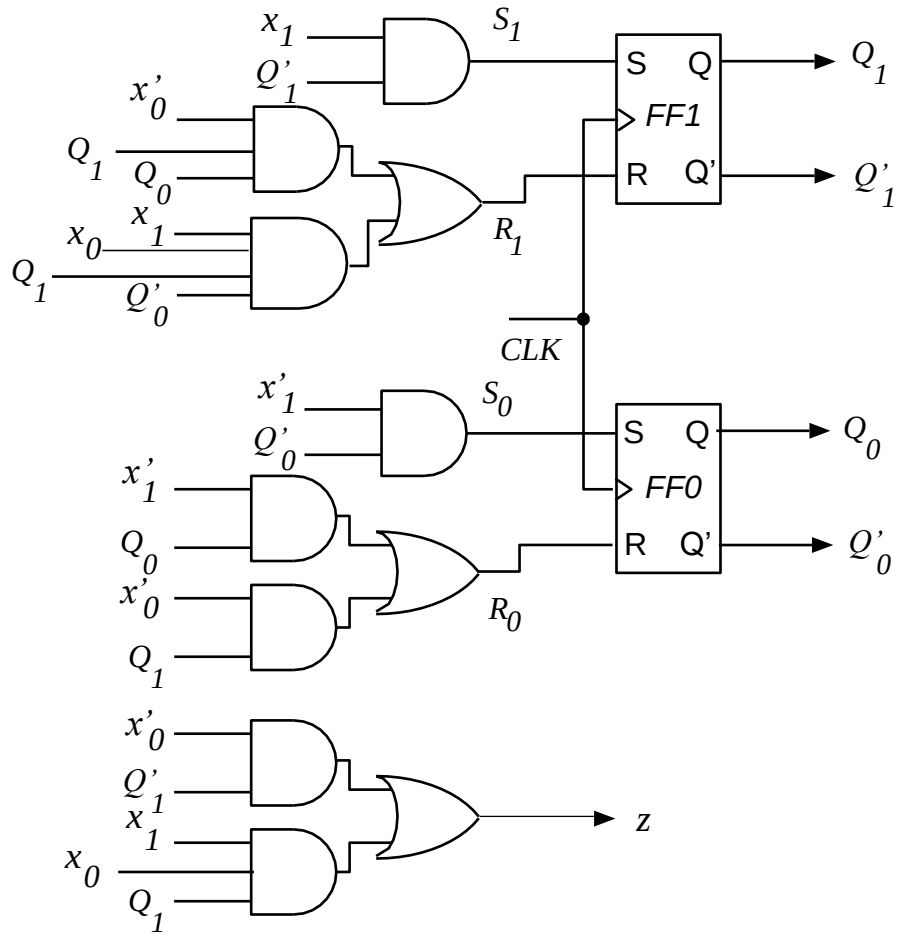

Figure 8.29: SEQUENTIAL NETWORK IN Example 8.9.

SPECIAL STATE ASSIGNMENTS

- ONE FLIP-FLOP PER STATE

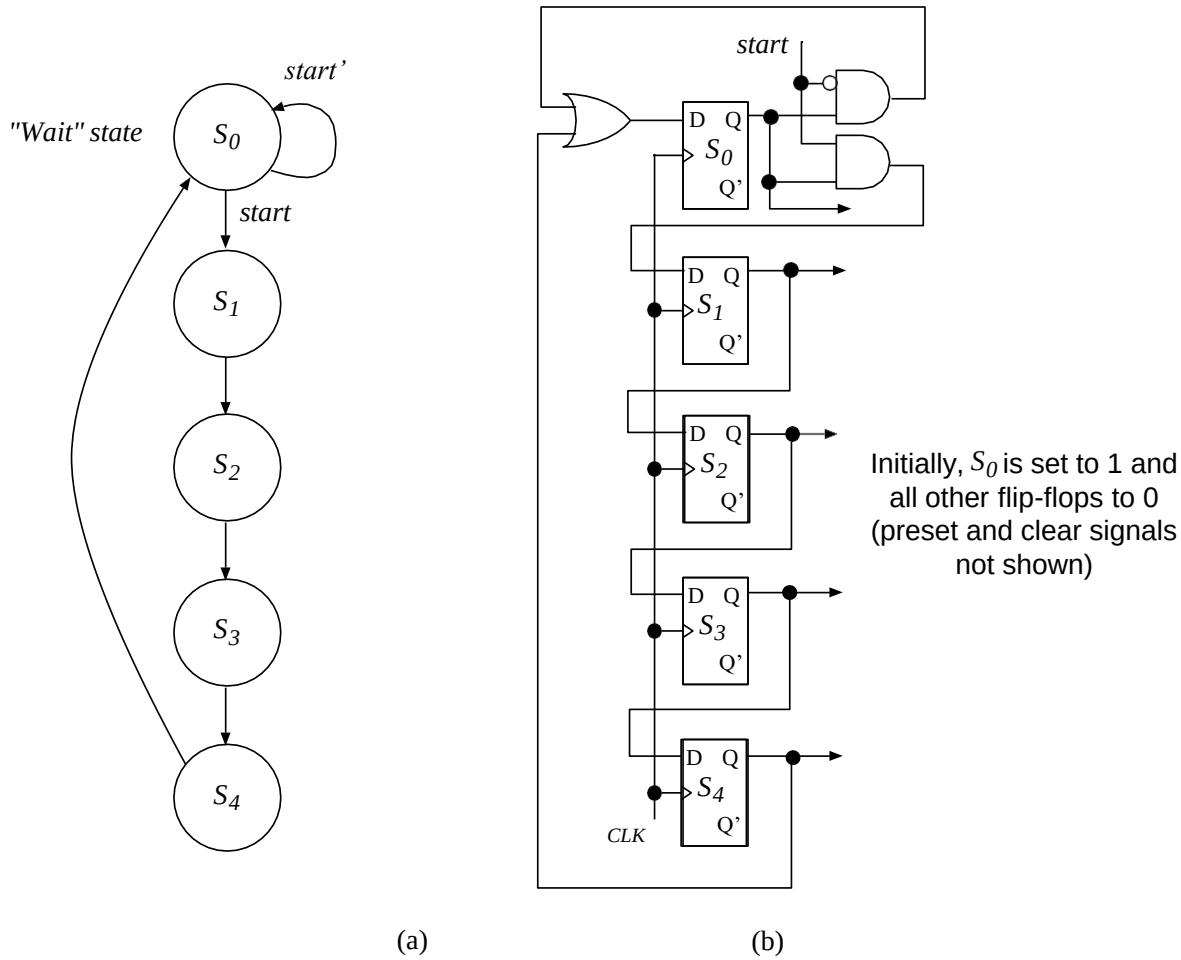

Figure 8.30: ONE FLIP-FLOP PER STATE APPROACH: a) STATE DIAGRAM. b) IMPLEMENTATION (Outputs omitted).

PRIMITIVES FOR "one-flip-flop-per-state" APPROACH

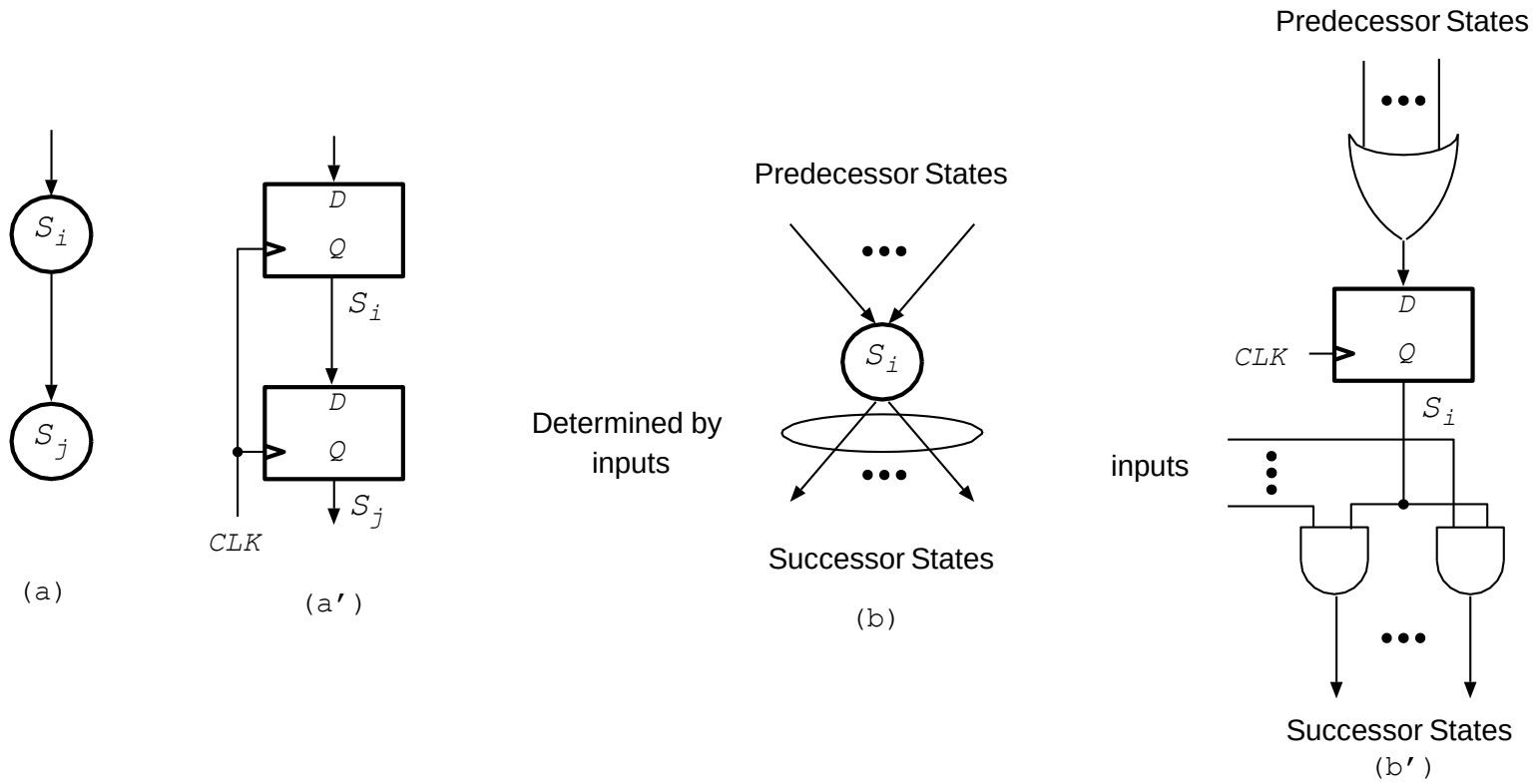

Figure 8.31: PRIMITIVES FOR THE "ONE-FLIP-FLOP-PER-STATE" APPROACH.

CONTROLLER FOR SIMPLE VENDING MACHINE

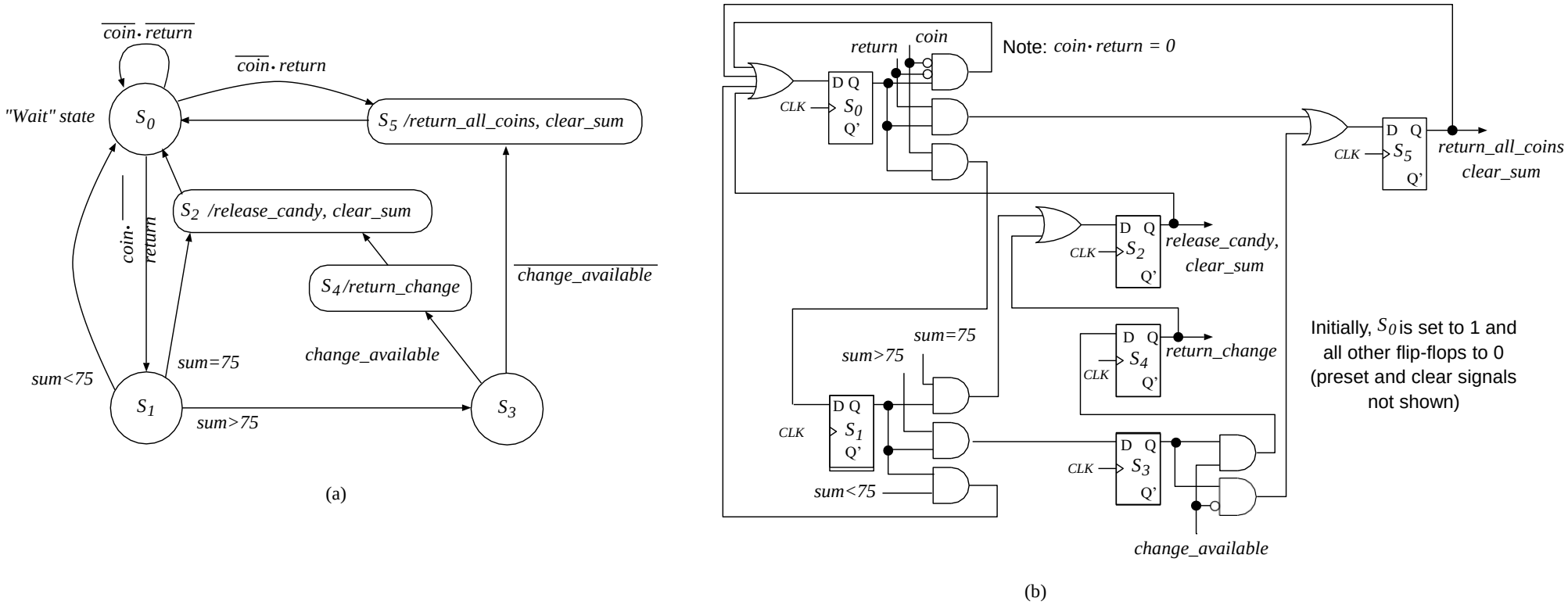

Figure 8.32: A ONE-FLIP-FLOP-PER-STATE IMPLEMENTATION OF A CONTROLLER FOR VENDING MACHINE: a) STATE DIAGRAM. b) IMPLEMENTATION.

SHIFTING STATE REGISTER: Example 8.10

Finite memory sequential system

Input: $x(t) \in \{0, 1\}$
Output: $z(t) \in \{0, 1\}$

Function: $z(t) = \begin{cases} 1 & \text{if} \quad x(t-3, t) = 1101 \\ 0 & \text{otherwise} \end{cases}$

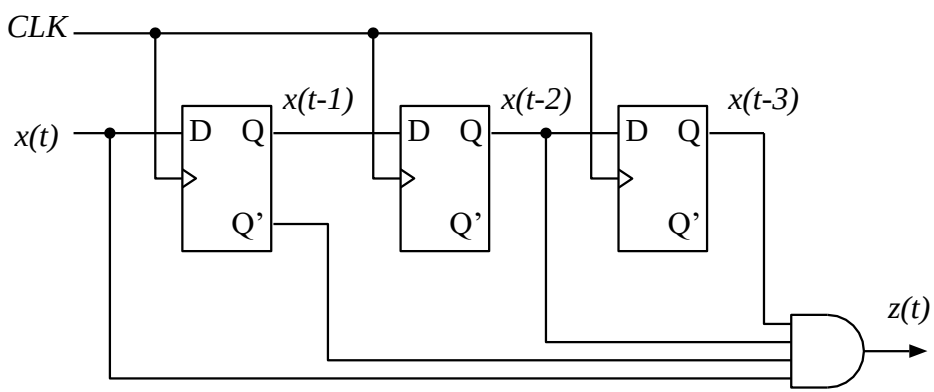

Figure 8.33: IMPLEMENTATION OF PATTERN RECOGNIZER IN EXAMPLE 8.10.

Analyze the canonical sequential network shown in figure (assuming initial state is 00)

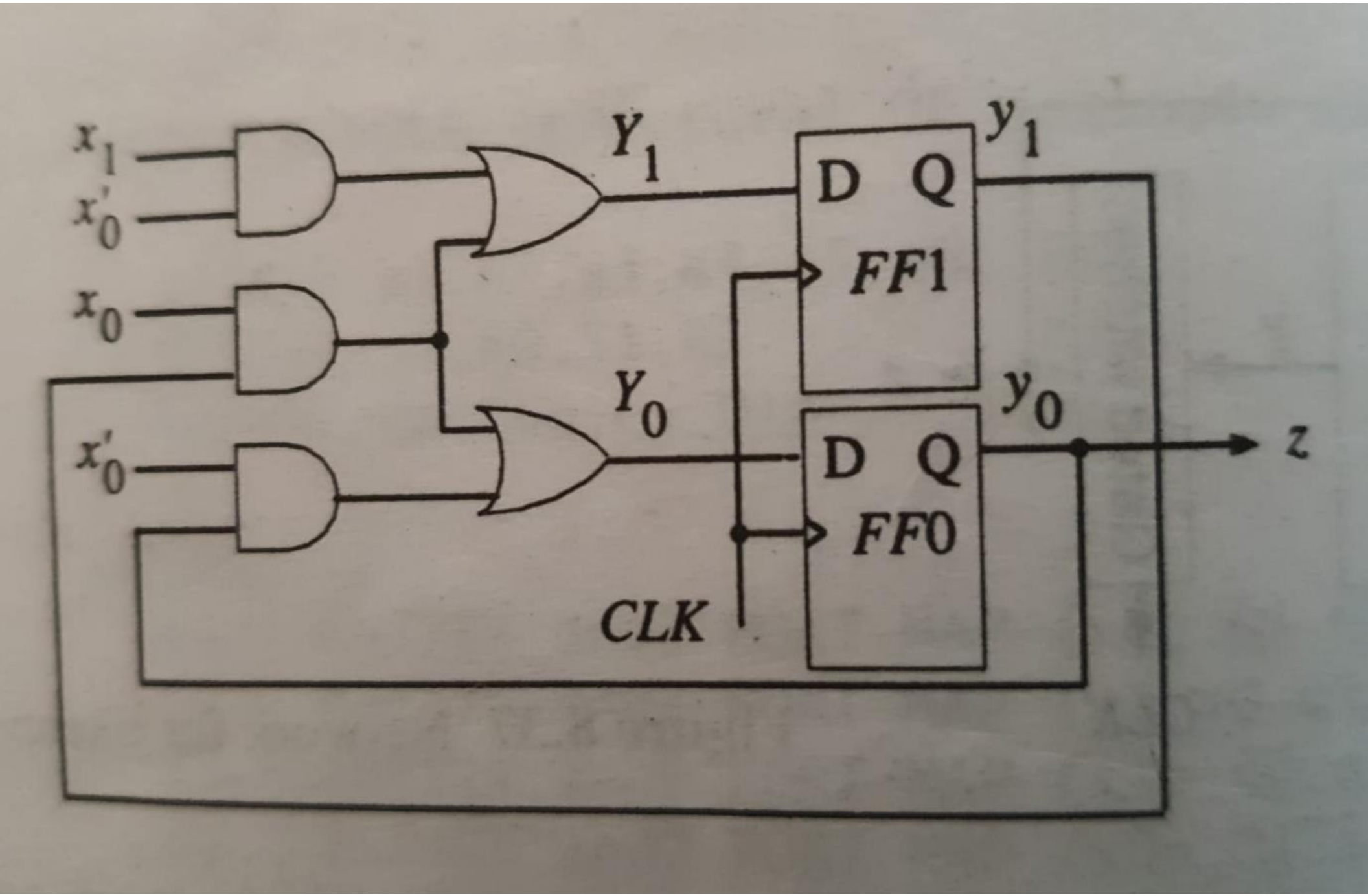

The transition and output functions are described by the following expressions:

$$
\begin{aligned}
Y_1 &= x_0' x_1 + x_0 y_1 \\
Y_0 &= y_0 x_0' + x_0 y_1 \\
z &= y_0
\end{aligned}
$$

PS	Input $(x_1 x_0)$				
$y_1 y_0$	00	01	10	11	
00	00	00	10	00	0
01	01	00	11	00	1
10	00	11	10	11	0
11	01	11	11	11	1
	NS$(Y_1 Y_0)$				Output (z)

The corresponding state table is (for state assignments $A = 00, B = 01, C = 10, D = 11$ and input coding $a = 00, b = 01, c = 10, d = 11$)

PS	Inputs				
	$x = a$	$x = b$	$x = c$	$x = d$	
A	A	A	C	A	0
B	B	A	D	A	1
C	A	D	C	D	0
D	B	D	D	D	1
	NS				Output (z)

The diagram in Figure 8.2 shows the state transitions of this system. The following patterns are recognized by the system (assuming that A is the initial state): cb, cbb, cbc, cd, cdc.

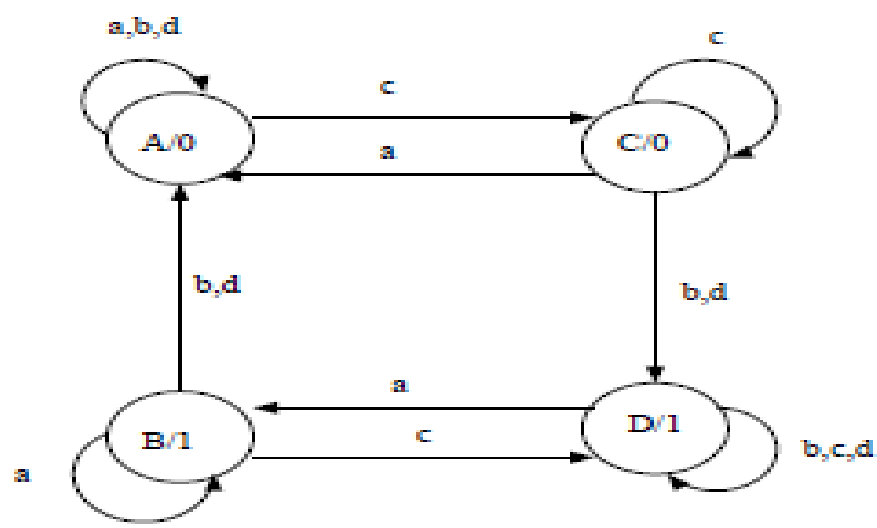

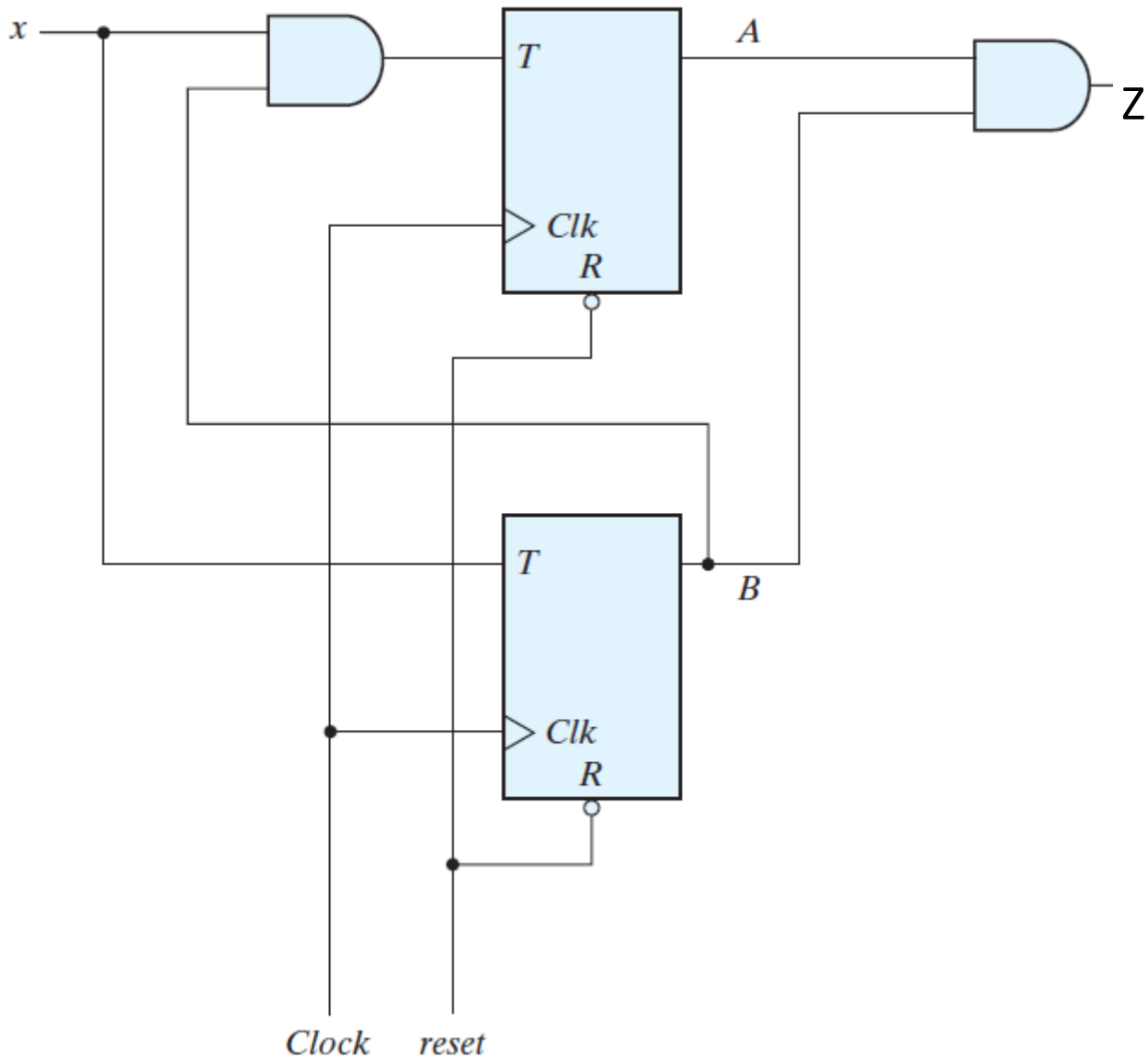
x
T
A
Z
Clk
R
T
B
Clk
R
Clock
reset

$$Q_A(t+1) = Q_A(t) \oplus x\, Q_B(t)$$

$$Q_B(t+1) = Q_B(t) \oplus x$$

	Q_B	$Q_A(t)$	$x=0$ Q_B	$Q_A(t+1)$	$x=1$ Q_B	$Q_A(t+1)$	z
S_0	0	0	0	0	1	0	0
S_1	0	1	0	1	1	1	0
S_2	1	0	1	0	0	1	0
S_3	1	1	1	1	0	0	1
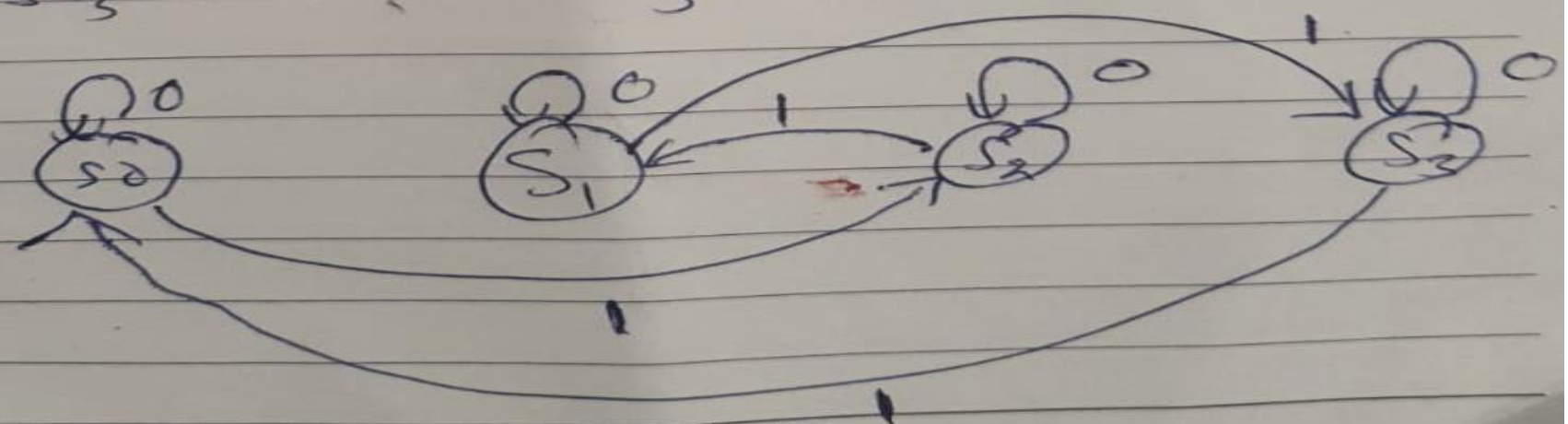
	$x_0=0$	$x=1$	z
S_0	S_0	S_2	0
S_1	S_1	S_3	0
S_2	S_2	S_1	0
S_3	S_3	S_0	1